PSC

——带法兰接触面的多棱锥接口(GB/T 32557/ISO 26623)

Multi-pyramid interface with flange contact surface

PSC产品整体解决方案助力您的高效切削加工！

PSC product integrated solution to help you efficient machining!

PSC工具接口介绍：

PSC tool interface introduction:

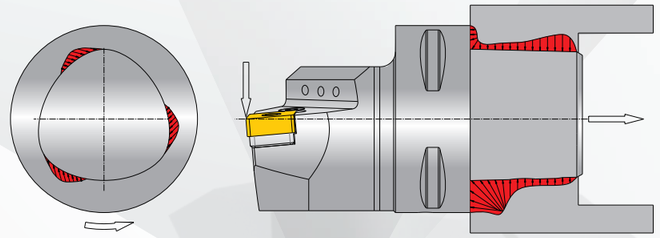

PSC是一种采用三棱锥定位，并实现棱锥锥面与法兰端面同时定位与夹紧的工具接口，现已纳入ISO及国家标准。其具有以下特点：

高刚性

三棱锥与端面同时定位与夹紧，使其具有极佳的抗弯与抗扭能力，可以提升刀具的切削性能，获得更高的加工效率。

高精度

采用三棱锥的定位方式，可以提供X、Y、Z三个方向±0.002mm的重复定位精度，是理想的车削工具接口，可以实现线下对刀线上直接加工，省去试切对刀环节。

换刀迅速

PSC工具接口采用涨爪式夹紧，能够将换刀时间压缩至一分钟内，有效提升机床的利用率。

易于实现模块化

可以通过用各种接长杆组合成需要的刀具，减少刀具库存

PSC is a kind of triangular pyramid positioning, and realize the pyramid cone and flange end at the same time positioning and clamping tool interface, has been included in ISO and national standards. It has the following characteristics:

High rigidity
Triangular pyramid and end face positioning and clamping at the same time, so that it has excellent bending and torsional resistance, can improve the cutting performance of the tool, obtain higher processing efficiency.

High precision
The positioning method of triangular pyramid can provide repeated positioning accuracy of ±0.002mm in X, Y and Z directions. It is an ideal turning tool interface, which can realize direct machining of offline tool and online tool, eliminating the link of test cutting tool.

Quick tool change
The PSC tool interface adopts the expanded claw clamping, which can compress the tool change time to one minute, effectively improving the utilization rate of the machine tool.

Easy to implement modularity.
Tool inventory can be reduced by using a variety of long rod combination into the required tool.

PSC夹紧原理（涨爪式）PSC clamping principle (extended claw type)

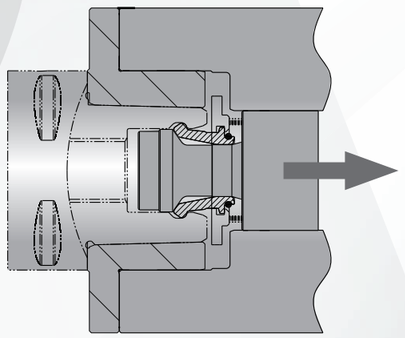

夹紧时，拉杆向右移动夹爪张开，夹爪外弧面顶在PSC锥柄内弧面上，带动PSC锥柄向右移动，锥柄发生变形，最终实现三棱锥面与法兰端面同时定位与夹紧。

When clamping, the pull rod moves to the right and the jaw opens. The outer arc surface of the claw is on the top of the inner arc surface of the PSC taper handle, which drives the PSC taper handle to move to the right, the taper handle deforms, and finally realizes the positioning and clamping of the triangular pyramid surface and the flange end face at the same time.

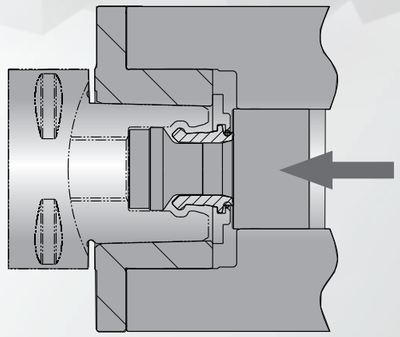

松开时，拉杆向左移动夹爪收缩，夹爪外弧面离开PSC锥柄内弧面，拉杆左端面将PSC锥柄推出接纳器，实现松刀。

When loosening, the tie rod moves the gripper to the left to shrink, and the outer arc surface of the gripper leaves the inner arc surface of the PSC taper shank, and the left end face of the tie rod pushes the PSC taper shank out of the receiver to realize the loosening tool.

PSC车刀

PSC turning tool

外螺纹车刀 external threading tool

-普通冷却设计
-冷却液设计压力≤10bar

General cooling design
- Coolant pressure ≤10bar

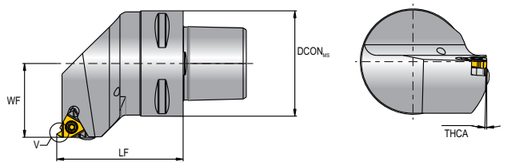

型号 Model 右刀 Right hand	型号 Model 左刀 Left hand	库存 Stock R	库存 Stock L	尺寸Size (mm) DCON$_{MS}$	LF	WF	刀片 Insert	螺钉 Screw	扳手 Torx wrench	刀垫 Shim	螺钉 Screw	扳手 Hex wrench
PSC3-SER-22040-16	PSC3-SEL-22040-16	○	○	32	40	22	16ER.. 16EL..	L60 M3.5x12	T15	TT16	SS04008	S2.5
PSC4-SER-27050-16	PSC4-SEL-27050-16	●	○	40	50	27						
PSC5-SER-35060-16	PSC5-SEL-35060-16	●	○	50	60	35						
PSC6-SER-45065-16	PSC6-SEL-45065-16	●	○	63	65	45						
PSC8-SER-55080-16	PSC8-SEL-55080-16	○	○	80	80	55						
PSC4-SER-27050-22	PSC4-SEL-27050-22	○	○	40	50	27	22ER.. 22EL..	L60 M4x16	T15	TT22	SS04008	S2.5
PSC5-SER-35060-22	PSC5-SEL-35060-22	○	○	50	60	35						
PSC6-SER-45065-22	PSC6-SEL-45065-22	○	○	63	65	45						
PSC8-SER-55080-22	PSC8-SEL-55080-22	○	○	80	80	55						

*刀片需单独订购 * Inserts should be ordered separately
*图例为右刀 * The picture shows the right tool

● 标准库存 ○ 订单生产
● Standard stock ○ Production to order

内螺纹车刀 internal threading tool

-普通冷却设计
-冷却液设计压力≤10bar

General cooling design
- Coolant pressure ≤10bar

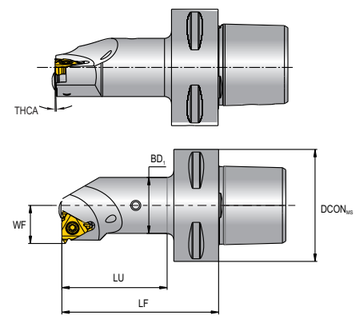

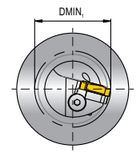

型号 Model 右刀 Right hand	型号 Model 左刀 Left hand	库存 Stock R	库存 Stock L	尺寸Size (mm) DMIN$_1$	LU	DCON$_{MS}$	BD$_1$	LF	WF	刀片	螺钉 Insert	扳手 Torx wrench	刀垫 Shim	刀垫螺钉 Shim screw	扳手 Hex wrench
PSC3-SNR-14060-16	PSC3-SNL-14060-16	○	○	32	44	32	20	60	14	16NL.. 16NR..	L60 M3.5x10	T15	-		
PSC4-SNR-14060-16	PSC4-SNL-14060-16	○	○	40	38	40	20	60	14						
PSC4-SNR-17070-16	PSC4-SNL-17070-16	○	○	40	48	40	25	70	17		L60 M3.5x12		TT16	SS04008	S2.5 T15
PSC4-SNR-22090-16	-	○	○	40	69	40	32	90	22						
PSC5-SNR-14060-16	PSC5-SNL-14060-16	○	○	50	36	50	20	60	14		L60 M3.5x10		-		
PSC5-SNR-17070-16	PSC5-SNL-17070-16	○	○	50	47	50	25	70	17						
PSC5-SNR-22090-16	PSC5-SNL-22090-16	○	○	50	68	50	32	90	22		L60 M3.5x12		TT16	SS04008	S2.5 T15
PSC5-SNR-27105-16	PSC5-SNL-27105-16	○	○	50	84	50	40	105	27						
PSC6-SNR-14070-16	PSC6-SNL-14070-16	○	○	63	42	63	20	70	14		L60 M3.5x10		-		
PSC6-SNR-17075-16	PSC6-SNL-17075-16	○	○	63	48	63	25	75	17						
PSC6-SNR-22090-16	PSC6-SNL-22090-16	○	○	63	64	63	32	90	22		L60 M3.5x12		TT16	SS04008	S2.5 T15
PSC6-SNR-27105-16	PSC6-SNL-27105-16	○	○	63	80	63	40	105	27						
PSC4-SNR-19070-22	PSC4-SNL-19070-22	○	○	40	48	40	25	70	19	22NR.. 22NL..	L60 M4x16		TT22	SS04008	S2.5 T15
PSC4-SNR-22090-22	PSC4-SNL-22090-22	○	○	40	69	40	32	90	22						
PSC4-SNR-27080-22	PSC4-SNL-27080-22	○	○	40	60	40	39.5	80	27						
PSC5-SNR-27105-22	PSC5-SNL-27105-22	○	○	50	84	50	40	105	26.9						
PSC5-SNR-19070-22	PSC5-SNL-19070-22	○	○	50	47	50	25	70	19						
PSC5-SNR-22090-22	PSC5-SNL-22090-22	○	○	50	68	50	32	90	22						
PSC6-SNR-27105-22	PSC6-SNL-27105-22	○	○	63	80	63	40	105	26.9						
PSC6-SNR-19075-22	PSC6-SNL-19075-22	○	○	63	48	63	25	75	19						
PSC6-SNR-22090-22	PSC6-SNL-22090-22	○	○	63	64	63	32	90	22						

*刀片需单独订购 * Inserts should be ordered separately
*图例为右刀 * The picture shows the right tool

● 标准库存 ○ 订单生产
● Standard stock ○ Production to order

螺钉压紧外圆车刀 Screw clamping external turning tool

-精准冷却设计
-冷却液设计压力≤150bar

Precise cooling design
Coolant design pressure ≤150bar

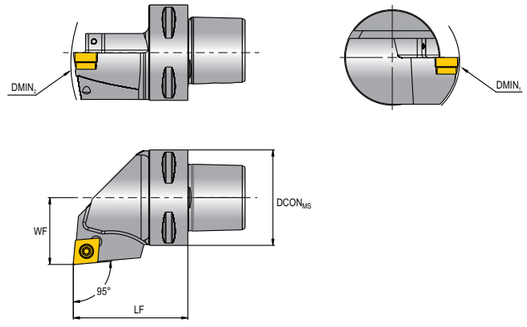

型号 Model 右刀 Right hand	左刀 Left hand	库存 Stock R	L	尺寸Size (mm) $DMIN_1$	$DMIN_2$	$DCON_{MS}$	LF	WF	刀片 Insert	刀垫 Shim	刀垫螺钉 Shim screw	螺钉 Screw	扳手 Torx wrench	扳手 Hex wrench
PSC3-SCLCR-22040-09HP	PSC3-SCLCL-22040-09HP	○	○	265	700	32	40	22	CC..09T3..	C09BS	SM0508	TL60 M3.5X12-5.3	T15	S3.5
PSC4-SCLCR-27050-09HP	PSC4-SCLCL-27050-09HP	○	○	272	600	40	50	27						
PSC4-SCLCR-27050-12HP	PSC4-SCLCL-27050-12HP	○	○	210	600	40	50	27	CC..1204..	C12BS	SM0604	L60 M4X12-7.2	T15	S4
PSC5-SCLCR-35060-12HP	PSC5-SCLCL-35060-12HP	○	○	210	550	50	60	35						
PSC6-SCLCR-45065-12HP	PSC6-SCLCL-45065-12HP	○	○	210	800	63	65	45						

*刀片需单独订购 * Inserts should be ordered separately
*图例为右刀 * The picture shows the right tool

● 标准库存 ○ 订单生产
● Standard stock ○ Production to order

螺钉压紧外圆车刀 Screw clamping external turning tool

-普通冷却设计
-冷却液设计压力≤10bar

General cooling design
- Coolant pressure ≤10bar

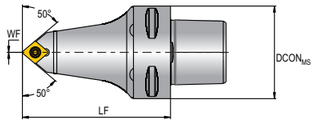

型号 Model	库存 Stock	尺寸Size (mm) $DCON_{MS}$	LF	WF	刀片 Insert	刀垫 Shim	刀垫螺钉 Shim Screw	螺钉 Screw	扳手 Torx wrench	扳手 Hex wrench
PSC6-SCMCN-00090-12	○	63	90	0	CC..1204..	C12BS	SM0604	L60 M4X12-7.2	T15	S4

*刀片需单独订购 * Inserts should be ordered separately

● 标准库存 ○ 订单生产
● Standard stock ○ Production to order

螺钉压紧外圆车刀 Screw clamping external turning tool

-普通冷却设计
-冷却液设计压力≤10bar

General cooling design
- Coolant pressure ≤10bar

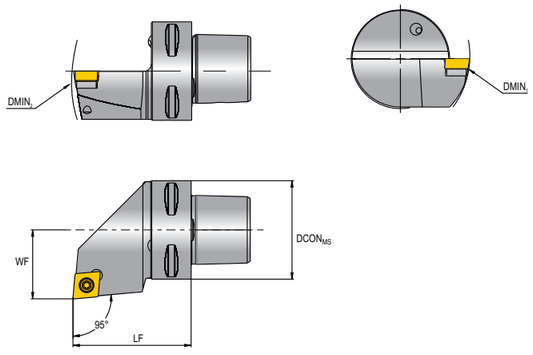

型号 Model 右刀 Right hand	左刀 Left hand	库存 Stock R	L	尺寸Size (mm) $DMIN_1$	$DMIN_2$	$DCON_{MS}$	LF	WF	刀片 Insert	刀垫 Shim	刀垫螺钉 Shim screw	螺钉 Screw	扳手 Torx wrench	扳手 Hex wrench
PSC3-SCLCR-22040-09	PSC3-SCLCL-22040-09	○	○	130	116	32	40	22	CC..09T3..	C09BS	SM0508	TL60 M3.5X12-5.3	T15	S3.5
PSC4-SCLCR-27050-09	PSC4-SCLCL-27050-09	○	○	130	140	40	50	27						
PSC5-SCLCR-35060-09	PSC5-SCLCL-35060-09	○	○	130	165	50	60	35						
PSC6-SCLCR-45065-09	PSC6-SCLCL-45065-09	○	○	130	190	63	65	45						
PSC3-SCLCR-22040-12	PSC3-SCLCL-22040-12	○	○	125	116	32	40	22	CC..1204..	C12BS	SM0604	L60 M4X12-7.2	T15	S4
PSC4-SCLCR-27050-12	PSC4-SCLCL-27050-12	○	●	125	140	40	50	27						
PSC5-SCLCR-35060-12	PSC5-SCLCL-35060-12	○	●	125	165	50	60	35						
PSC6-SCLCR-45065-12	PSC6-SCLCL-45065-12	○	●	125	190	63	65	45						

*刀片需单独订购 * Inserts should be ordered separately
*图例为右刀 * The picture shows the right tool

● 标准库存 ○ 订单生产
● Standard stock ○ Production to order

螺钉压紧外圆车刀 Screw clamping external turning tool

-精准冷却设计
-冷却液设计压力≤150bar

Precise cooling design
Coolant design pressure ≤150bar

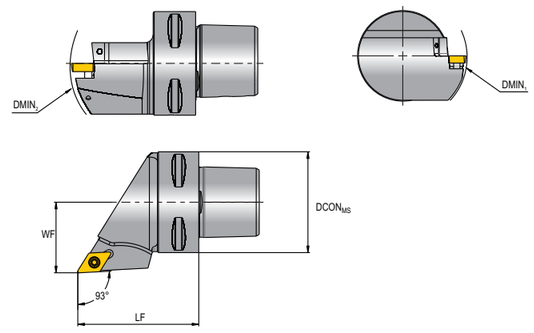

型号 Model 右刀 Right hand	左刀 Left hand	库存 Stock R	L	尺寸Size (mm) $DMIN_1$	$DMIN_2$	$DCON_{MS}$	LF	WF	刀片 Insert	刀垫 Shim	刀垫螺钉 Shim screw	螺钉 Screw	扳手 Torx wrench	扳手 Hex wrench
PSC3-SDJCR-22040-11HP	PSC3-SDJCL-22040-11HP	○	○	244	135	32	40	22	DC..11T3..	D11BS	SM0508	TL60 M3.5X12-5.3	T15	S3.5
PSC4-SDJCR-27050-11HP	PSC4-SDJCL-27050-11HP	○	○	246	140	40	50	27						
PSC5-SDJCR-35060-11HP	PSC5-SDJCL-35060-11HP	○	○	250	165	50	60	35						
PSC6-SDJCR-45065-11HP	PSC6-SDJCL-45065-11HP	○	○	250	190	63	65	45						

*刀片需单独订购 * Inserts should be ordered separately
*图例为右刀 * The picture shows the right tool

● 标准库存 ○ 订单生产
● Standard stock ○ Production to order

螺钉压紧外圆车刀 Screw clamping external turning tool

-普通冷却设计
-冷却液设计压力≤10bar

General cooling design
- Coolant pressure ≤10bar

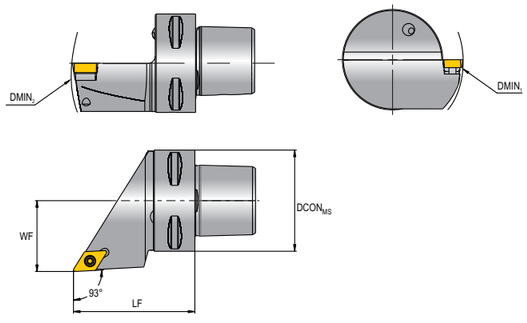

型号 Model 右刀 Right hand	型号 Model 左刀 Left hand	库存 Stock R	库存 Stock L	尺寸Size (mm) $DMIN_1$	$DMIN_2$	$DCON_{MS}$	LF	WF	刀片 Insert	刀垫 Shim	刀垫螺钉 Shim screw	螺钉 Screw	扳手 Torx wrench	扳手 Hex wrench
PSC3-SDJCR-22040-07	PSC3-SDJCL-22040-07	○	○	70	116	32	40	22	DC..0702..	-	-	TL60 M2.5X6.5	T08	-
PSC4-SDJCR-27050-07	PSC4-SDJCL-27050-07	○	○	70	116	40	50	27						
PSC3-SDJCR-22040-11	PSC3-SDJCL-22040-11	○	○	244	135	32	40	22	DC..11T3..	D11BS	SM0508	TL60 M3.5X12-5.3	T15	S3.5
PSC4-SDJCR-27050-11	PSC4-SDJCL-27050-11	○	●	246	140	40	50	27						
PSC5-SDJCR-35060-11	PSC5-SDJCL-35060-11	○	●	250	165	50	60	35						
PSC6-SDJCR-45065-11	PSC6-SDJCL-45065-11	○	●	250	190	63	65	45						

*刀片需单独订购 * Inserts should be ordered separately
*图例为右刀 * The picture shows the right tool

● 标准库存 ○ 订单生产
● Standard stock ○ Production to order

螺钉压紧外圆车刀 Screw clamping external turning tool

-精准冷却设计
-冷却液设计压力≤150bar

Precise cooling design
Coolant design pressure ≤150bar

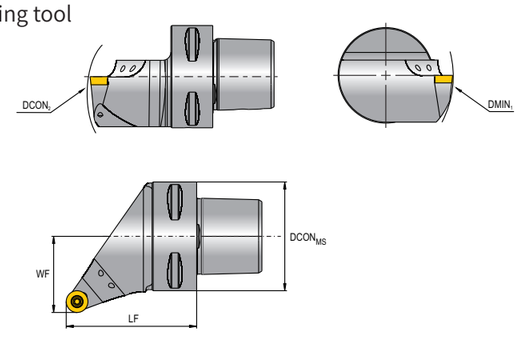

型号 Model 右刀 Right hand	型号 Model 左刀 Left hand	库存 Stock R	库存 Stock L	尺寸Size (mm) $DMIN_1$	$DMIN_2$	$DCON_{MS}$	LF	WF	刀片 Insert	螺钉 Screw	扳手 Torx wrench
PSC5-SRSCR-35060-10HP	PSC5-SRSCL-35060-10HP	○	○	130	270	50	60	35	RC..1003MO	TL60 M3.5X10	T15
PSC6-SRSCR-45065-10HP	PSC6-SRSCL-45065-10HP	○	○	140	300	63	65	45			
PSC5-SRSCR-35060-12HP	PSC5-SRSCL-35060-12HP	○	○	130	270	50	60	35	RC..1204MO	TL60 M4X10	T15
PSC5-SRSCR-35060-12HPA	PSC5-SRSCL-35060-12HPA	○	○	150	165	50	60	35			
PSC6-SRSCR-45065-12HP	PSC6-SRSCL-45065-12HP	○	○	120	195	63	65	45			
PSC6-SRSCR-45065-12HPA	PSC6-SRSCL-45065-12HPA	○	○	150	190	63	65	45			
PSC5-SRSCR-35060-16HPA	PSC5-SRSCL-35060-16HPA	○	○	175	165	50	60	35	RC..1606MO	TL60 M5X13	T20
PSC6-SRSCR-45065-16HPA	PSC6-SRSCL-45065-16HPA	○	○	175	190	63	65	45			

Precise cooling design
Coolant design pressure ≤150bar

*刀片需单独订购 * Inserts should be ordered separately
*图例为右刀 * The picture shows the right tool

● 标准库存 ○ 订单生产
● Standard stock ○ Production to order

螺钉压紧外圆车刀 Screw clamping external turning tool

-普通冷却设计
-冷却液设计压力≤10bar

General cooling design
- Coolant pressure ≤10bar

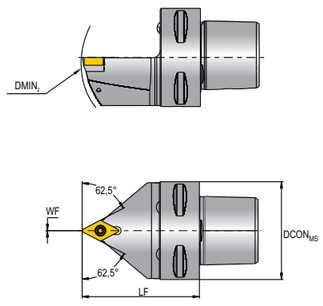

型号 Model	库存 Stock	尺寸Size (mm) $DMIN_2$	$DCON_{MS}$	LF	WF	刀片 Insert	刀垫 Shim	刀垫螺钉 Shim screw	螺钉 Screw	扳手 Torx wrench	扳手 Hex wrench
PSC3-SDNCN-00040-11	○	116	32	40	0	DC..11T3..	D11BS	SM0508	TL60 M3.5X12-5.3	T15	S3.5
PSC4-SDNCN-00050-11	○	140	40	50	0						
PSC5-SDNCN-00060-11	○	165	50	60	0						

*刀片需单独订购 * Inserts should be ordered separately

● 标准库存 ○ 订单生产
● Standard stock ○ Production to order

螺钉压紧外圆车刀 Screw clamping external turning tool

-精准冷却设计
-冷却液设计压力≤150bar

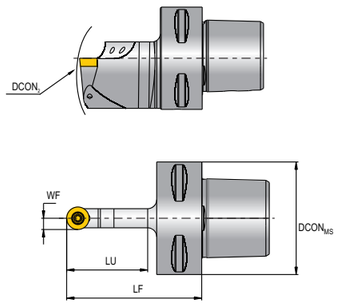

型号 Model	库存 Stock R	库存 Stock L	尺寸Size (mm) $DMIN_2$	$DCON_{MS}$	LU	LF	WF	刀片 Insert	螺钉 Screw	扳手 Torx wrench
PSC5-SRDCN-00060-10HP	○	○	165	50	25	60	5	RC..1003MO	TL60 M3.5X10	T15
PSC4-SRDCN-00050-12HP	○	○	140	40	28	50	6	RC..1204MO	TL60 M4X10	T15
PSC5-SRDCN-00060-12HP	○	○	165	50	28	60	6			
PSC6-SRDCN-00065-12HP	○	○	190	63	28	65	6			
PSC6-SRDCN-00065-16HP	○	○	190	63	35	65	8	RC..1606MO	TL60 M5X13	T20

*刀片需单独订购 * Inserts should be ordered separately

● 标准库存 ○ 订单生产
● Standard stock ○ Production to order

螺钉压紧外圆车刀 Screw clamping external turning tool

-普通冷却设计
-冷却液设计压力≤10bar

General cooling design
- Coolant pressure ≤10bar

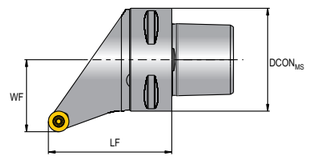

型号 Model 右刀 Right hand	型号 Model 左刀 Left hand	库存 Stock R	库存 Stock L	尺寸Size (mm) DCON$_{MS}$	LF	WF	刀片 Insert	螺钉 Screw	扳手 Torx wrench
PSC3-SRSCR-22040-10	PSC3-SRSCL-22040-10	○	○	32	40	22	RC..1003MO	TL60 M3.5X10	T15
PSC4-SRSCR-27050-10	PSC4-SRSCL-27050-10	○	○	40	50	27			
PSC5-SRSCR-35060-10	PSC5-SRSCL-35060-10	○	○	50	60	35			
PSC6-SRSCR-45065-10	PSC6-SRSCL-45065-10	○	○	63	65	45			
PSC4-SRSCR-27050-12	PSC4-SRSCL-27050-12	○	○	40	50	27	RC..1204MO	TL60 M4X10	T15
PSC5-SRSCR-35060-12	PSC5-SRSCL-35060-12	○	○	50	60	35			
PSC6-SRSCR-45065-12	PSC6-SRSCL-45065-12	○	○	63	65	45			
PSC5-SRSCR-35060-16	PSC5-SRSCL-35060-16	○	○	50	60	35	RC..1606MO	TL60 M5X13	T20
PSC6-SRSCR-45065-16	PSC6-SRSCL-45065-16	○	○	63	65	45			

*刀片需单独订购 * Inserts should be ordered separately
*图例为右刀 * The picture shows the right tool

● 标准库存 ○ 订单生产
● Standard stock ○ Production to order

螺钉压紧外圆车刀 Screw clamping external turning tool

-精准冷却设计
-冷却液设计压力≤150bar

Precise cooling design
Coolant design pressure ≤150bar

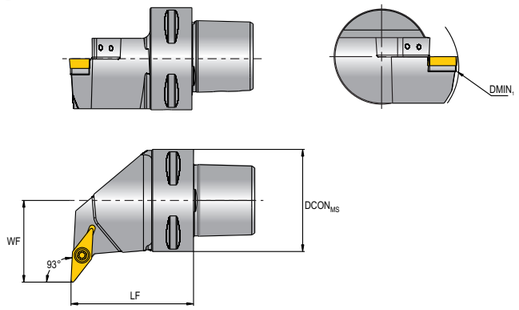

型号 Model 右刀 Right hand	型号 Model 左刀 Left hand	库存 Stock R	库存 Stock L	尺寸Size (mm) DMIN$_1$	DCON$_{MS}$	LF	WF	刀片 Insert	刀垫 Shim	刀垫螺钉 Shim Screw	螺钉 Screw	扳手 Hex wrench	扳手 Hex wrench
PSC6-SVUBR-45065-16HP	PSC6-SVUBL-45065-16HP	○	○	85	63	65	45	VB..1604..	V16BS	SM0508	TL60 M3.5X12-5.3	T15	S3.5
PSC6-SVUBR-55080-16HP	PSC6-SVUBL-55080-16HP	○	○	100	85	80	55						

*刀片需单独订购 * Inserts should be ordered separately
*图例为右刀 * The picture shows the right tool

● 标准库存 ○ 订单生产
● Standard stock ○ Production to order

螺钉压紧外圆车刀 Screw clamping external turning tool

-普通冷却设计
-冷却液设计压力≤10bar

General cooling design
- Coolant pressure ≤10bar

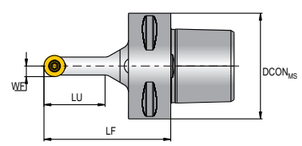

型号 Model	库存 Stock	尺寸Size (mm) DCON$_{MS}$	LU	LF	WF	刀片 Insert	螺钉 Screw	扳手 Hex wrench
PSC4-SRDCN-00050-10A	○	40	25	50	5	RC..1003MO	TL60 M3.5X10	T15
PSC5-SRDCN-00060-10A	○	50	25	60	5			
PSC6-SRDCN-00065-10A	○	63	25	65	5			
PSC4-SRDCN-00050-12A	○	40	28	50	6	RC..1204MO	TL60 M4X10	T15
PSC5-SRDCN-00060-12A	○	50	28	60	6			
PSC6-SRDCN-00065-12A	○	63	28	65	6			
PSC5-SRDCN-00060-16A	○	50	35	60	8	RC..1606MO	TL60 M5X13	T20
PSC6-SRDCN-00065-16A	○	63	35	65	8			

*刀片需单独订购 * Inserts should be ordered separately

● 标准库存 ○ 订单生产
● Standard stock ○ Production to order

螺钉压紧外圆车刀 Screw clamping external turning tool

-精准冷却设计
-冷却液设计压力≤150bar

Precise cooling design
Coolant design pressure ≤150bar

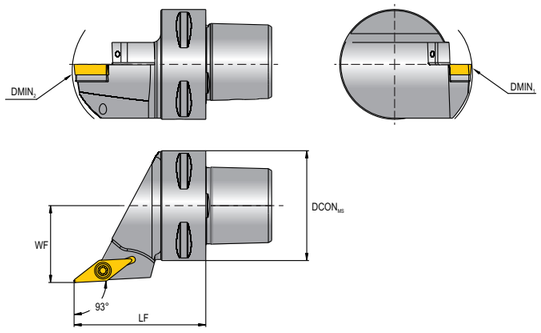

型号 Model 右刀 Right hand	型号 Model 左刀 Left hand	库存 Stock R	库存 Stock L	尺寸Size (mm) DMIN$_1$	DMIN$_2$	DCON$_{MS}$	LF	WF	刀片 Insert	刀垫 Shim	刀垫螺钉 Shim screw	螺钉 Screw	扳手 Torx wrench	扳手 Hex wrench
PSC3-SVJBR-22040-11HP	PSC3-SVJBL-22040-11HP	○	○	368	116	32	40	22	VB..1103..	-	-	TL60 M2.5X6.5	T08	-
PSC4-SVJBR-27050-11HP	PSC4-SVJBL-27050-11HP	○	○	434	140	40	50	27						
PSC4-SVJBR-27050-16HP	PSC4-SVJBL-27050-16HP	○	○	270	140	40	50	27	VB..1604..	V16BS	SM0508	TL60 M3.5X12-5.3	T15	S3.5
PSC5-SVJBR-35060-16HP	PSC5-SVJBL-35060-16HP	○	○	270	165	50	60	35						
PSC6-SVJBR-45065-16HP	PSC6-SVJBL-45065-16HP	○	○	270	190	63	65	45						
PSC8-SVJBR-55080-16HP	PSC8-SVJBL-55080-16HP	○	○	270	248	80	80	55						

*刀片需单独订购 * Inserts should be ordered separately
*图例为右刀 * The picture shows the right tool

● 标准库存 ○ 订单生产
● Standard stock ○ Production to order

螺钉压紧外圆车刀 Screw clamping external turning tool

-精准冷却设计
-冷却液设计压力≤150bar

Precise cooling design
Coolant design pressure ≤150bar

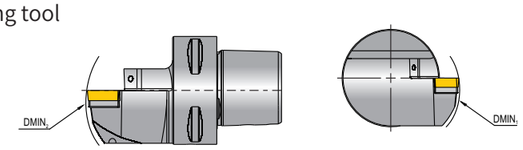

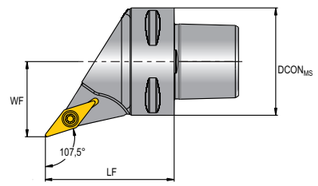

型号 Model 右刀 Right hand	型号 Model 左刀 Left hand	库存 Stock R	库存 Stock L	尺寸Size (mm) $DMIN_1$	$DMIN_2$	$DCON_{MS}$	LF	WF	刀片 Insert	刀垫 Shim	刀垫螺钉 Shim screw	螺钉 Screw	扳手 Torx wrench	扳手 Hex wrench
PSC4-SVHBR-27050-16HP	PSC4-SVHBL-27050-16HP	○	○	124	140	40	50	27	VB..1604..	V16BS	SM0508	TL60 M3.5X12-5.3	T15	S3.5
PSC5-SVHBR-35060-16HP	PSC5-SVHBL-35060-16HP	○	○	124	165	50	60	35						
PSC6-SVHBR-45065-16HP	PSC6-SVHBL-45065-16HP	○	○	134	190	63	65	45						

*刀片需单独订购 * Inserts should be ordered separately
*图例为右刀 * The picture shows the right tool

●标准库存 ○订单生产
● Standard stock ○ Production to order

螺钉压紧外圆车刀 Screw clamping external turning tool

-普通冷却设计
-冷却液设计压力≤10bar

General cooling design
- Coolant pressure ≤10bar

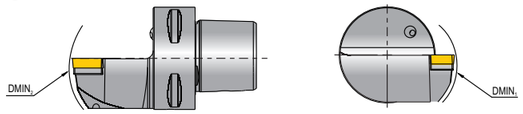

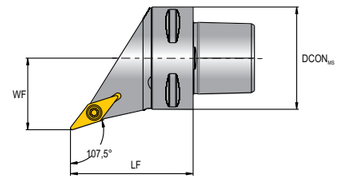

型号 Model 右刀 Right hand	型号 Model 左刀 Left hand	库存 Stock R	库存 Stock L	尺寸Size (mm) $DMIN_1$	$DMIN_2$	$DCON_{MS}$	LF	WF	刀片 Insert	刀垫 Shim	刀垫螺钉 Shim Screw	螺钉 Screw	扳手 Torx wrench	扳手 Hex wrench
PSC3-SVHBR-22040-11	PSC3-SVHBL-22040-11	○	○	55	116	32	40	22	VB..1103..	-	-	TL60 M2.5X6.5	T08	-
PSC4-SVHBR-27050-11	PSC4-SVHBL-27050-11	○	○	55	140	40	50	27						
PSC5-SVHBR-35060-11	PSC5-SVHBL-35060-11	○	○	65	165	50	60	35						
PSC4-SVHBR-27050-16	PSC4-SVHBL-27050-16	○	○	95	140	40	50	27	VB..1604..	V16BS	SM0508	TL60 M3.5X12-5.3	T15	S3.5
PSC5-SVHBR-35060-16	PSC5-SVHBL-35060-16	○	○	95	165	50	60	35						
PSC6-SVHBR-45065-16	PSC6-SVHBL-45065-16	○	○	95	190	63	65	45						

*刀片需单独订购 * Inserts should be ordered separately
*图例为右刀 * The picture shows the right tool

●标准库存 ○订单生产
● Standard stock ○ Production to order

螺钉压紧外圆车刀 Screw clamping external turning tool

-精准冷却设计
-冷却液设计压力≤150bar

Precise cooling design
Coolant design pressure ≤150bar

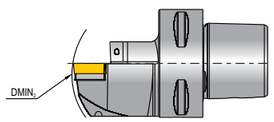

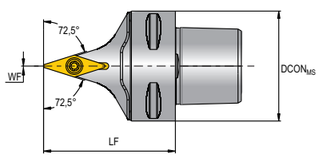

型号 Model	库存 Stock R	尺寸Size (mm) $DMIN_2$	$DCON_{MS}$	LF	WF	刀片 Insert	刀垫 Shim	刀垫螺钉 Shim screw	螺钉 Screw	扳手 Hex wrench	扳手 Hex wrench
PSC4-SVVBN-00055-16HP	○	165	50	60	0	VB..1604..	V16BS	SM0508	TL60 M3.5X12-5.3	T15	S3.5
PSC5-SVVBN-00060-16HP	○	165	50	60	0						
PSC6-SVVBN-00065-16HP	○	190	63	65	0						

*刀片需单独订购 * Inserts should be ordered separately

●标准库存 ○订单生产
● Standard stock ○ Production to order

螺钉压紧外圆车刀 Screw clamping external turning tool

-普通冷却设计
-冷却液设计压力≤10bar

General cooling design
- Coolant pressure ≤10bar

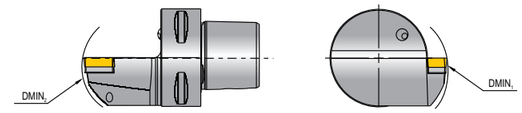

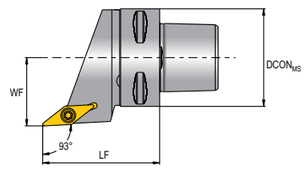

型号 Model 右刀 Right hand	型号 Model 左刀 Left hand	库存 Stock R	库存 Stock L	尺寸Size (mm) $DMIN_1$	$DMIN_2$	$DCON_{MS}$	LF	WF	刀片 Insert	刀垫 Shim	刀垫螺钉 Shim screw	螺钉 Screw	扳手 Torx wrench	扳手 Hex wrench
PSC3-SVJBR-22040-11	PSC3-SVJBL-22040-11	○	○	105	116	32	40	22	VB..1103..	-	-	TL60 M2.5X6.5	T08	-
PSC4-SVJBR-27050-11	PSC4-SVJBL-27050-11	○	○	105	140	40	50	27						
PSC5-SVJBR-35060-11	PSC5-SVJBL-35060-11	○	○	125	165	50	60	35						
PSC4-SVJBR-27050-16	PSC4-SVJBL-27050-16	○	●	155	140	40	50	27	VB..1604..	V16BS	SM0508	TL60 M3.5X12-5.3	T15	S3.5
PSC5-SVJBR-35060-16	PSC5-SVJBL-35060-16	○	●	155	165	50	60	35						
PSC6-SVJBR-45065-16	PSC6-SVJBL-45065-16	○	●	155	190	63	65	45						

*刀片需单独订购 * Inserts should be ordered separately

●标准库存 ○订单生产
● Standard stock ○ Production to order

螺钉压紧外圆车刀 Screw clamping external turning tool

-普通冷却设计
-冷却液设计压力≤10bar
General cooling design
- Coolant pressure ≤10bar

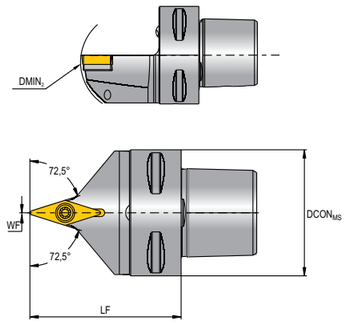

型号 Model	库存 Stock	尺寸Size (mm) DMIN2	DCONMS	LF	WF	刀片 Insert	刀垫 Shim	刀垫螺钉 Shim screw	螺钉 Screw	扳手 Torx wrench	扳手 Hex wrench
PSC4-SVVBN-00050-16	○	140	40	50	0	VB..1604..	V16BS	SM0508	TL60 M3.5X12-5.3	T15	S3.5
PSC5-SVVBN-00060-16	○	165	50	60	0						
PSC6-SVVBN-00065-16	○	190	63	65	0						

*刀片需单独订购 * Inserts should be ordered separately

● 标准库存 ○ 订单生产
● Standard stock ○ Production to order

螺钉压紧内孔车刀 Screw clamping internal turning tool

-普通冷却设计
-冷却液设计压力≤10bar
General cooling design
- Coolant pressure ≤10bar

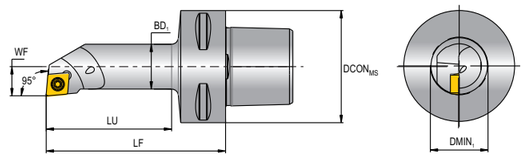

型号 Model 右刀 Right hand	左刀 Left hand	库存 Stock R	L	尺寸Size (mm) DMIN1	DCONMS	BD1	LU	LF	WF	刀片 Insert	刀垫 Shim	刀垫螺钉 Shim screw	螺钉 Screw	扳手 Torx wrench	扳手 Hex wrench
PSC3-SCLCR-11065-09	PSC3-SCLCL-11065-09	○	○	20	32	16	48	65	11	CC..09T3..	-	-	TL60 M4X10	T15	-
PSC3-SCLCR-13075-09	PSC3-SCLCL-13075-09	○	○	25	32	20	58	75	13						
PSC3-SCLCR-17090-09	PSC3-SCLCL-17090-09	○	○	32	32	25	74	90	13						
PSC4-SCLCR-11070-09	PSC4-SCLCL-11070-09	○	●	20	40	16	47	70	11						
PSC4-SCLCR-13080-09	PSC4-SCLCL-13080-09	○	●	25	40	20	57	80	13						
PSC4-SCLCR-17090-09	PSC4-SCLCL-17090-09	○	●	32	40	25	68	90	17						
PSC4-SCLCR-27080-09	PSC4-SCLCL-27080-09	○	○	50	40	40	60	80	27		C09BS	SM0508	TL60 M3.5X12-5.3	T15	S3.5
PSC5-SCLCR-11070-09	PSC5-SCLCL-11070-09	○	●	20	50	16	46	70	11		-	-	TL60 M4X10	T15	-
PSC5-SCLCR-13080-09	PSC5-SCLCL-13080-09	○	●	25	50	20	56	80	13						
PSC5-SCLCR-17090-09	PSC5-SCLCL-17090-09	○	●	32	50	25	67	90	17						
PSC3-SCLCR-17090-12	PSC3-SCLCL-17090-12	○	○	32	32	25	74	90	17	CC..1204..	-	-	TL60 M5X13	T20	-
PSC3-SCLCR-22096-12	PSC3-SCLCL-22096-12	○	○	40	32	32	81	96	22		C12BS	SM0604	TL60 M4X12-7.2	T15	S4
PSC4-SCLCR-22110-12	PSC4-SCLCL-22110-12	○	○	40	40	32	89	110	22						
PSC5-SCLCR-22110-12	PSC5-SCLCL-22110-12	○	○	40	50	32	88	110	22						
PSC5-SCLCR-27140-12	PSC5-SCLCL-27140-12	○	○	50	50	40	119	140	27						
PSC5-SCLCR-35100-12	PSC5-SCLCL-35100-12	○	○	63	50	50	80	100	35						

*刀片需单独订购 * Inserts should be ordered separately
*图例为右刀 * The picture shows the right tool

● 标准库存 ○ 订单生产
● Standard stock ○ Production to order

螺钉压紧内孔车刀 Screw clamping internal turning tool

-精准冷却设计
-冷却液设计压力≤150bar
Precise cooling design
Coolant design pressure ≤150bar

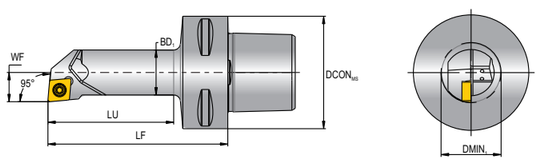

型号 Model 右刀 Right hand	左刀 Left hand	库存 Stock R	L	尺寸Size (mm) DMIN1	DCONMS	BD1	LU	LF	WF	刀片 Insert	螺钉 Screw	扳手 Torx wrench
PSC3-SCLCR-11065-09HP	PSC3-SCLCL-11065-09HP	○	○	21.5	32	16	48	65	11	CC..09T3..	TL60 M4X10	T15
PSC4-SCLCR-11070-09HP	PSC4-SCLCL-11070-09HP	○	○	21.5	40	16	47	70	11			
PSC4-SCLCR-13080-09HP	PSC4-SCLCL-13080-09HP	○	○	25	40	20	57	80	13			
PSC5-SCLCR-11070-09HP	PSC5-SCLCL-11070-09HP	○	○	21.5	50	16	46	70	11			
PSC5-SCLCR-13080-09HP	PSC5-SCLCL-13080-09HP	○	○	25	50	20	56	80	13			
PSC4-SCLCR-17090-12HP	PSC4-SCLCL-17090-12HP	○	○	32	40	25	69	90	17	CC..1204..	TL60 M5X13	T20
PSC5-SCLCR-17090-12HP	PSC5-SCLCL-17090-12HP	○	○	32	50	25	67	90	17			

*刀片需单独订购 * Inserts should be ordered separately
*图例为右刀 * The picture shows the right tool

● 标准库存 ○ 订单生产
● Standard stock ○ Production to order

螺钉压紧内孔车刀 Screw clamping internal turning tool

-精准冷却设计
-冷却液设计压力≤150bar
Precise cooling design
Coolant design pressure ≤150bar

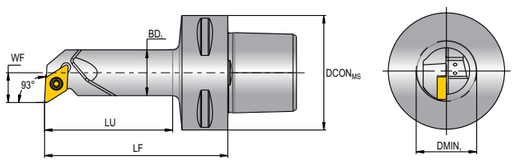

型号 Model 右刀 Right hand	左刀 Left hand	库存 Stock R	L	尺寸Size (mm) DMIN1	DCONMS	BD1	LU	LF	WF	刀片 Insert	螺钉 Screw	扳手 Torx wrench
PSC4-SDUCR-13080-07HP	PSC4-SDUCL-13080-07HP	○	○	25	40	20	58	80	13	DC..0702..	TL60 M2.5X6.5	T08
PSC4-SDUCR-13080-11HP	PSC4-SDUCL-13080-11HP	○	○	25	40	20	58	80	13	DC..11T3..	TL60 M4X10	T15
PSC4-SDUCR-17090-11HP	PSC4-SDUCL-17090-11HP	○	○	32	40	25	69	90	17			
PSC5-SDUCR-13080-11HP	PSC5-SDUCL-13080-11HP	○	○	25	50	20	56	80	13			
PSC5-SDUCR-17090-11HP	PSC5-SDUCL-17090-11HP	○	○	32	50	25	67	90	17			

*刀片需单独订购 * Inserts should be ordered separately
*图例为右刀 * The picture shows the right tool

● 标准库存 ○ 订单生产
● Standard stock ○ Production to order

螺钉压紧内孔车刀 Screw clamping internal turning tool

-普通冷却设计
-冷却液设计压力≤10bar

General cooling design
- Coolant pressure ≤10bar

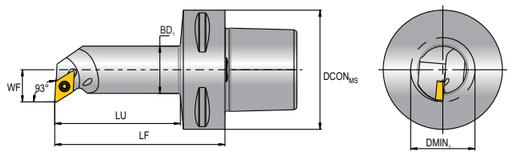

型号 Model 右刀 Right hand	型号 Model 左刀 Left hand	库存 Stock R	库存 Stock L	尺寸Size (mm) DMIN1	DCONMS	BD1	LU	LF	WF	刀片 Insert	刀垫 Shim	刀垫螺钉 Shim screw	螺钉 Screw	扳手 Torx wrench	扳手 Hex wrench
PSC3-SDUCR-11065-07	PSC3-SDUCL-11065-07	○	○	20	32	16	48	65	11	DC..0702..	-	-	TL60 M2.5X6.5	T08	-
PSC4-SDUCR-11070-07	PSC4-SDUCL-11070-07	○	○	20	40	16	47	70	11						
PSC5-SDUCR-11070-07	PSC5-SDUCL-11070-07	○	○	20	50	16	46	70	11						
PSC3-SDUCR-13075-11	PSC3-SDUCL-13075-11	○	○	25	32	20	58	75	13	DC..11T3..	-	-	TL60 M4X10	T15	-
PSC3-SDUCR-17090-11	PSC3-SDUCL-17090-11	○	○	32	32	25	73	90	17						
PSC4-SDUCR-13080-11	PSC4-SDUCL-13080-11	○	●	25	40	20	57	80	13						
PSC4-SDUCR-17090-11	PSC4-SDUCL-17090-11	○	●	32	40	25	68	90	17						
PSC4-SDUCR-22110-11	PSC4-SDUCL-22110-11	○	●	40	40	32	89	110	22		D11BS	SM0508	TL60 M3.5X12-5.3	T15	S3.5
PSC4-SDUCR-27080-11	PSC4-SDUCL-27080-11	○	○	50	40	40	60	80	27						
PSC5-SDUCR-13080-11	PSC5-SDUCL-13080-11	○	●	25	50	20	56	80	13		-	-	TL60 M3.5X10	T15	-
PSC5-SDUCR-17090-11	PSC5-SDUCL-17090-11	○	●	32	50	25	67	90	17						
PSC5-SDUCR-22110-11	PSC5-SDUCL-22110-11	○	●	40	50	32	88	110	22		D11BS	SM0508	TL60 M3.5X12-5.3	T15	S3.5
PSC5-SDUCR-35100-11	PSC5-SDUCL-35100-11	○	○	63	50	50	80	100	35						

*刀片需单独订购 * Inserts should be ordered separately
*图例为右刀 * The picture shows the right tool

●标准库存 ○订单生产
● Standard stock ○ Production to order

螺钉压紧内孔车刀 Screw clamping internal turning tool

-精准冷却设计
-冷却液设计压力≤150bar

Precise cooling design
Coolant design pressure ≤150bar

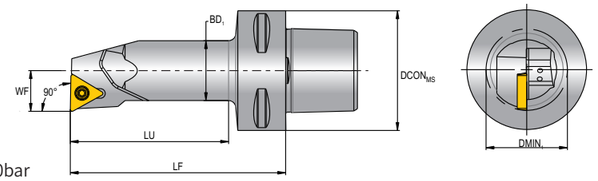

型号 Model 右刀 Right hand	型号 Model 左刀 Left hand	库存 Stock R	库存 Stock L	尺寸Size (mm) DMIN1	DCONMS	BD1	LU	LF	WF	刀片 Insert	刀垫 Shim	刀垫螺钉 Shim screw	螺钉 Screw	扳手 Torx wrench	扳手 Hex wrench
PSC4-STFCR-11070-11HP	PSC4-STFCL-11070-11HP	○	○	20	40	16	47	70	11	TC..1102..	-	-	TL60 M2.5X6.5	T08	-
PSC4-STFCR-13080-11HP	PSC4-STFCL-13080-11HP	○	○	25	40	20	57	80	13						
PSC4-STFCR-17090-16HP	PSC4-STFCL-17090-16HP	○	○	32	40	25	69	90	17	TC..16T3..	-	-	TL60 M4X10	T15	-
PSC5-STFCR-17090-16HP	PSC5-STFCL-17090-16HP	○	○	32	50	25	67	90	17						
PSC5-STFCR-22110-16HP	PSC5-STFCL-22110-16HP	○	○	40	50	32	88	110	22		T16BS	SM0508	TL60 M3.5X12-5.3	T15	S3.5

*刀片需单独订购 * Inserts should be ordered separately
*图例为右刀 * The picture shows the right tool

●标准库存 ○订单生产
● Standard stock ○ Production to order

螺钉压紧内孔车刀 Screw clamping internal turning tool

-普通冷却设计
-冷却液设计压力≤10bar

General cooling design
- Coolant pressure ≤10bar

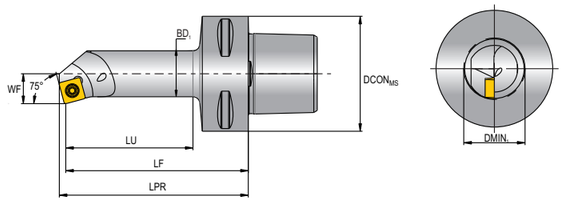

型号 Model 右刀 Right hand	型号 Model 左刀 Left hand	库存 Stock R	库存 Stock L	尺寸Size (mm) DMIN1	DCONMS	BD1	LU	LPR	LF	WF	刀片 Insert	螺钉 Screw	扳手 Torx wrench
PSC4-SSKCR-13080-09	PSC4-SSKCR-13080-09	○	○	25	40	20	58	82.2	80	13	SC..09T3..	TL60 M4X10	T15
PSC5-SSKCR-13080-09	PSC5-SSKCR-13080-09	○	○	25	50	20	56	82.2	80	13			

*刀片需单独订购 * Inserts should be ordered separately
*图例为右刀 * The picture shows the right tool

●标准库存 ○订单生产
● Standard stock ○ Production to order

螺钉压紧内孔车刀 Screw clamping internal turning tool

-普通冷却设计
-冷却液设计压力≤10bar

General cooling design
- Coolant pressure ≤10bar

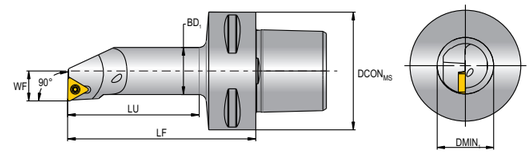

型号 Model 右刀 Right hand	型号 Model 左刀 Left hand	库存 Stock R	库存 Stock L	尺寸Size (mm) DMIN1	DCONMS	BD1	LU	LF	WF	刀片 Insert	刀垫 Shim	刀垫螺钉 Shim screw	螺钉 Screw	扳手 Torx wrench	扳手 Hex wrench
PSC4-STFCR-11070-11	PSC4-STFCL-11070-11	○	○	20	40	16	47	70	11	TC..1102.	-	-	TL60 M2.5X6.5	T08	-
PSC4-STFCR-13080-11	PSC4-STFCL-13080-11	○	○	25	40	20	57	80	13						
PSC5-STFCR-11070-11	PSC5-STFCL-11070-11	○	○	20	50	16	46	70	11						
PSC5-STFCR-13080-11	PSC5-STFCL-13080-11	○	○	25	50	20	56	80	13						
PSC4-STFCR-22110-16	PSC4-STFCL-22110-16	○	○	40	40	32	89	110	22	TC..16T3..	T16BS	SM0508	TL60 M3.5X12-5.3	T15	S3.5

*刀片需单独订购 * Inserts should be ordered separately
*图例为右刀 * The picture shows the right tool

●标准库存 ○订单生产
● Standard stock ○ Production to order

螺钉压紧内孔车刀 Screw clamping internal turning tool

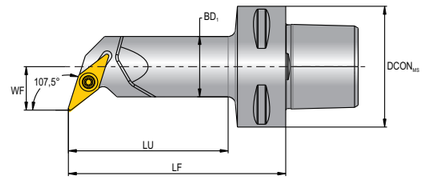

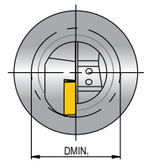

-精准冷却设计
-冷却液设计压力≤150bar

Precise cooling design
Coolant design pressure ≤150bar

型号 Model 右刀 Right hand	左刀 Left hand	库存 Stock R	L	尺寸Size (mm) DMIN1	DCONMS	BD1	LU	LF	WF	刀片 Insert	刀垫 Shim	刀垫螺钉 Shim screw	螺钉 Screw	扳手 Torx wrench	扳手 Hex wrench
PSC4-SVQBR-13070-11HP	PSC4-SVQBL-13070-11HP	○	○	25	40	20	47	70	13	VB..1103..	-	-	TL60 M2.5X6.5	T08	-
PSC4-SVQBR-18090-16HP	PSC4-SVQBL-18090-16HP	○	○	33	40	25	68	90	18	VB..1604..	-	-	TL60 M4X10	T15	-
PSC5-SVQBR-18090-16HP	PSC5-SVQBL-18090-16HP	○	○	33	50	25	67	90	18						
PSC6-SVQBR-22120-16HP	PSC6-SVQBL-22120-16HP	○	○	40	63	32	94	120	22		V16BS	SM0508	TL60 M3.5X12-5.3	T15	S3.5

*刀片需单独订购 * Inserts should be ordered separately
*图例为右刀 * The picture shows the right tool

● 标准库存 ○ 订单生产
● Standard stock ○ Production to order

螺钉压紧内孔车刀 Screw clamping internal turning tool

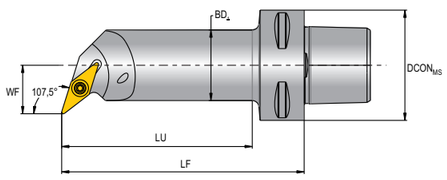

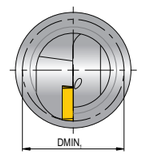

-普通冷却设计
-冷却液设计压力≤10bar

General cooling design
- Coolant pressure ≤10bar

型号 Model 右刀 Right hand	左刀 Left hand	库存 Stock R	L	尺寸Size (mm) DMIN1	DCONMS	BD1	LU	LF	WF	刀片 Insert	刀垫 Shim	刀垫螺钉 Shim screw	螺钉 Screw	扳手 Torx wrench	扳手 Hex wrench
PSC4-SVQBR-13070-11	PSC4-SVQBL-13070-11	○	○	25	40	20	48	70	13	VB..1103..	-	-	TL60 M2.5X6.5	-	T08
PSC4-SVQBR-15080-11	PSC4-SVQBL-15080-11	○	○	27	40	20	58	80	15						
PSC5-SVQBR-15080-11	PSC5-SVQBL-15080-11	○	○	27	50	20	56	80	15	VB..1604..					
PSC4-SVQBR-18090-16	PSC4-SVQBL-18090-16	○	○	33	40	25	68	90	18		-	-	TL60 M4X10	-	T15
PSC4-SVQBR-22110-16	PSC4-SVQBL-22110-16	○	○	40	40	32	89	110	22		V16BS	SM0508	TL60 M3.5X12-5.3	T15	S3.5
PSC4-SVQBR-27120-16	PSC4-SVQBL-27120-16	○	○	50	40	40	100	120	27						
PSC5-SVQBR-22110-16	PSC5-SVQBL-22110-16	○	○	40	50	32	88	110	22						
PSC5-SVQBR-27140-16	PSC5-SVQBL-27140-16	○	○	50	50	40	119	140	27						
PSC5-SVQBR-18090-16	PSC5-SVQBL-18090-16	○	○	33	50	25	67	90	18		-	-	TL60 M4X10	-	T15
PSC5-SVQBR-35150-16	PSC5-SVQBL-35150-16	○	○	63	50	50	130	150	35		V16BS	SM0508	TL60 M3.5X12-5.3	T15	S3.5
PSC6-SVQBR-27145-16	PSC6-SVQBL-27145-16	○	○	50	63	40	120	145	27						
PSC6-SVQBR-35175-16	PSC6-SVQBL-35175-16	○	○	63	63	50	151	175	35						

*刀片需单独订购 * Inserts should be ordered separately
*图例为右刀 * The picture shows the right tool

● 标准库存 ○ 订单生产
● Standard stock ○ Production to order

螺钉压紧内孔车刀 Screw clamping internal turning tool

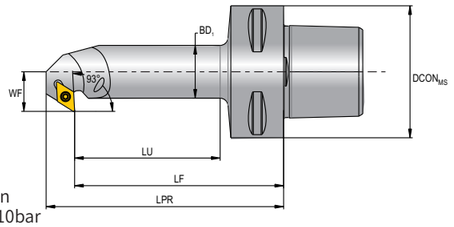

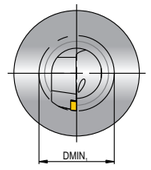

-普通冷却设计
-冷却液设计压力≤10bar

General cooling design
- Coolant pressure ≤10bar

型号 Model 右刀 Right hand	左刀 Left hand	库存 Stock R	L	尺寸Size (mm) DMIN1	DCONMS	BD1	LU	LPR	LF	WF	刀片 Insert	螺钉 Screw	扳手 Torx wrench
PSC4-SDUCR-13070-07X	PSC4-SDUCL-13070-07X	○	○	22	40	16	47.3	81.5	70	13	DC..0702..	TL60 M2.5X6.5	T08
PSC4-SDUCR-15080-07X	PSC4-SDUCL-15080-07X	○	○	27	40	20	57.9	91.5	80	15			
PSC4-SDUCR-18090-07X	PSC4-SDUCL-18090-07X	○	○	32	40	25	68.5	101.5	90	18			
PSC5-SDUCR-18090-07X	PSC5-SDUCL-18090-07X	○	○	32	50	25	67.2	101.5	90	18			
PSC5-SDUCR-15080-07X	PSC5-SDUCL-15080-07X	○	○	27	50	20	56.5	91.5	80	15			

*刀片需单独订购 * Inserts should be ordered separately
*图例为右刀 * The picture shows the right tool

● 标准库存 ○ 订单生产
● Standard stock ○ Production to order

杠杆压紧外圆车刀 Lever clamping external turning tool

-精准冷却设计
-冷却液设计压力≤150bar

Precise cooling design
Coolant design pressure ≤150bar

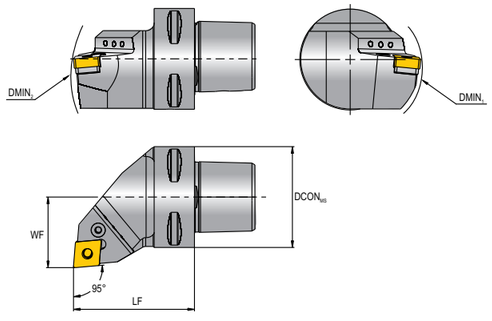

型号 Model 右刀 Right hand	左刀 Left hand	库存 Stock R	L	尺寸Size (mm) $DMIN_1$	$DMIN_2$	$DCON_{MS}$	LF	WF	刀片 Insert	刀垫 Shim	杠杆 lever	挡垫 Shim pin	腰槽螺丝 Screw	扳手 Hex wrench
PSC4-PCLNR-27050-12HP	PSC4-PCLNL-27050-12HP	○	○	110	140	40	50	27	CN..1204..	PC12318	LV4	SP4	VHX0821	S3
PSC5-PCLNR-35060-12HP	PSC5-PCLNL-35060-12HP	○	○	110	165	50	60	35						
PSC6-PCLNR-45065-12HP	PSC6-PCLNL-45065-12HP	○	○	110	195	63	65	45						
PSC8-PCLNR-55080-12HP	PSC8-PCLNL-55080-12HP	○	○	110	250	80	80	55						
PSC5-PCLNR-35060-16HP	PSC5-PCLNL-35060-16HP	○	○	125	165	50	60	35	CN..1606..	PC16476	LV5	SP5	VHX0825	S3
PSC6-PCLNR-45065-16HP	PSC6-PCLNL-45065-16HP	○	○	110	195	63	65	45						
PSC8-PCLNR-55080-16HP	PSC8-PCLNL-55080-16HP	○	○	125	250	80	80	55						
PSC6-PCLNR-45065-19HP	PSC6-PCLNL-45065-19HP	○	○	110	195	63	65	45	CN..1906..	PC19476	LV6	SP6	VHX1027	S4
PSC8-PCLNR-55080-19HP	PSC8-PCLNL-55080-19HP	○	○	150	250	80	80	55						
PSC10-PCLNR-68110-19HP	PSC10-PCLNL-68110-19HP	○	○	220	315	100	110	68						

*刀片需单独订购 * Inserts should be ordered separately
*图例为右刀 * The picture shows the right tool

● 标准库存 ○ 订单生产
● Standard stock ○ Production to order

杠杆压紧外圆车刀 Lever clamping external turning tool

-精准冷却设计
-冷却液设计压力≤150bar

Precise cooling design
Coolant design pressure ≤150bar

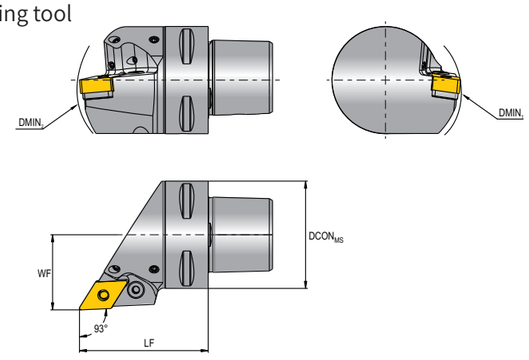

型号 Model 右刀 Right hand	左刀 Left hand	库存 Stock R	L	尺寸Size (mm) $DMIN_1$	$DMIN_2$	$DCON_{MS}$	LF	WF	刀片 Insert	刀垫 Shim	杠杆 lever	挡垫 Shim pin	腰槽螺丝 Screw	扳手 Hex wrench
PSC4-PDJNR-27050-11HP	PSC4-PDJNL-27050-11HP	○	○	90	145	40	50	27	DN..1104..	PD11270	LV3	SP3	VHX0613	S2.5
PSC5-PDJNR-35060-11HP	PSC5-PDJNL-35060-11HP	○	○	110	165	50	60	35						
PSC4-PDJNR-27055-15HP	PSC4-PDJNL-27055-15HP	○	○	65	145	40	55	27	DN..1506..	PD15318	LV4B	SP4	VHX1027	S3
PSC5-PDJNR-35060-15HP	PSC5-PDJNL-35060-15HP	○	○	65	165	50	60	35						
PSC6-PDJNR-45065-15HP	PSC6-PDJNL-45065-15HP	○	○	95	195	63	65	45						
PSC8-PDJNR-55080-15HP	PSC8-PDJNL-55080-15HP	○	○	130	250	80	80	55						
PSC10-PDJNR-68110-15HP	PSC10-PDJNL-68110-15HP	○	○	180	280	100	110	68						

*刀片需单独订购 * Inserts should be ordered separately
*图例为右刀 * The picture shows the right tool

● 标准库存 ○ 订单生产
● Standard stock ○ Production to order

杠杆压紧外圆车刀 Lever clamping external turning tool

-精准冷却设计
-冷却液设计压力≤150bar

Precise cooling design
Coolant design pressure ≤150bar

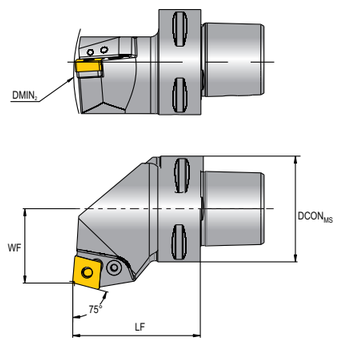

型号 Model 右刀 Right hand	左刀 Left hand	库存 Stock R	L	尺寸Size (mm) $DMIN_2$	$DCON_{MS}$	LF	WF	刀片 Insert	刀垫 Shim	杠杆 lever	挡垫 Shim pin	腰槽螺丝 Screw	扳手 Hex wrench
PSC6-PCRNR-35065-16HP	PSC6-PCRNL-35065-16HP	○	○	190	63	65	35	CN..1606..	PC16476	LV5	SP5	VHX0825	S3
PSC6-PCRNR-35065-19HP	PSC6-PCRNL-35065-19HP	○	○	190	63	65	35	CN..1906..	PC19476	LV6	SP6	VHX1027	S4

*刀片需单独订购 * Inserts should be ordered separately
*图例为右刀 * The picture shows the right tool

● 标准库存 ○ 订单生产
● Standard stock ○ Production to order

杠杆压紧外圆车刀 Lever clamping external turning tool

-精准冷却设计
-冷却液设计压力≤150bar

Precise cooling design
Coolant design pressure ≤150bar

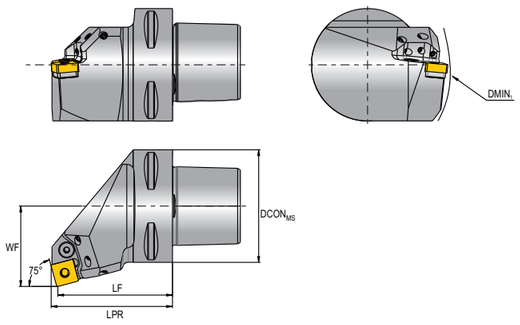

型号 Model 右刀 Right hand	左刀 Left hand	库存 Stock R	L	尺寸Size (mm) $DMIN_1$	$DCON_{MS}$	LPR	LF	WF	刀片 Insert	刀垫 Shim	杠杆 lever	挡垫 Shim pin	腰槽螺丝 Screw	扳手 Hex wrench
PSC6-PSKNR-45065-15HP	PSC6-PSKNL-45065-15HP	○	○	125	63	68.8	65	45	SN..1506..	PS15476	LV5	SP5	VHX0825	S3
PSC6-PSKNR-45065-19HP	PSC6-PSKNL-45065-19HP	○	○	125	63	69.6	65	45	SN..1906..	PS19476	LV6	SP6	VHX1027	S4

*刀片需单独订购 * Inserts should be ordered separately
*图例为右刀 * The picture shows the right tool

● 标准库存 ○ 订单生产
● Standard stock ○ Production to order

杠杆压紧外圆车刀 Lever clamping external turning tool

-精准冷却设计
-冷却液设计压力≤150bar

Precise cooling design
Coolant design pressure ≤150bar

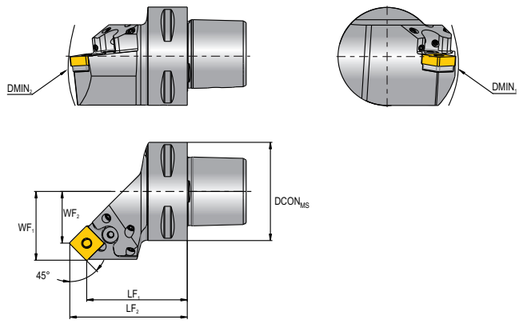

型号 Model 右刀 Right hand	左刀 Left hand	库存 Stock R	L	尺寸Size (mm) $DMIN_1$	$DMIN_2$	$DCON_{MS}$	LF_1	LF_2	WF_1	WF_2	刀片 Insert	刀垫 Shim	杠杆 lever	挡垫 Shim pin	腰槽螺丝 Screw	扳手 Hex wrench
PSC4-PSSNR-27042-12HP	PSC4-PSSNL-27042-12HP	○	○	90	145	40	42	50.3	27	18.7	SN..1204..	PS12318	LV4	SP4	VHX0821	S3
PSC5-PSSNR-35052-12HP	PSC5-PSSNL-35052-12HP	○	○	110	165	50	52	60.3	35	26.7						
PSC6-PSSNR-45056-12HP	PSC6-PSSNL-45056-12HP	○	○	110	200	63	56	64.3	45	36.7						
PSC8-PSSNR-55080-12HP	PSC8-PSSNL-55080-12HP	○	○	200	260	80	80	88.3	55	46.7						
PSC6-PSSNR-45054-15HP	PSC6-PSSNL-45054-15HP	○	○	110	200	63	54	64.2	45	34.8	SN..1506..	PS15476	LV5	SP5	VHX0825	S3
PSC6-PSSNR-45052-19HP	PSC6-PSSNL-45052-19HP	○	○	110	180	63	52	64.5	45	32.5	SN..1906..	PS19476	LV6	SP6	VHX1027	S4
PSC8-PSSNR-55080-19HP	PSC8-PSSNL-55080-19HP	○	○	200	260	80	80	92.5	55	42.5						
PSC10-PSSNR-68092-19HP	PSC10-PSSNL-68092-19HP	○	○	260	315	100	92	104.5	68	55.5						

*刀片需单独订购 * Inserts should be ordered separately
*图例为右刀 * The picture shows the right tool

●标准库存 ○订单生产
● Standard stock ○ Production to order

杠杆压紧内孔车刀 Lever Clamping internal turning tool

-精准冷却设计
-冷却液设计压力≤150bar

Precise cooling design
Coolant design pressure ≤150bar

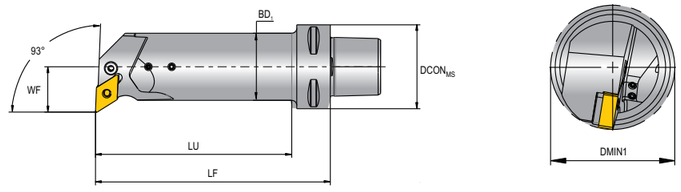

型号 Model 右刀 Right hand	左刀 Left hand	库存 Stock R	L	尺寸Size (mm) $DMIN_1$	$DCON_{MS}$	BD_1	LU	LF	WF	刀片 Insert	刀垫 Shim	杠杆 lever	挡垫 Shim pin	腰槽螺丝 Screw	扳手 Hex wrench
PSC4-PDUNR-22110-11HP	PSC4-PDUNL-22110-11HP	○	○	40	40	32	86.6	110	22	DN..1104..	PD11270	LV3	SP3	VHX0613	S2.5
PSC5-PDUNR-22110-11HP	PSC5-PDUNL-22110-11HP	○	○	40	50	32	82.2	110	22						
PSC4-PDUNR-27080-15HP	PSC4-PDUNL-27080-15HP	○	○	50	40	40	59	80	27	DN..1506..	PD15318	LV4B	SP4	VHX1027	S3
PSC4-PDUNR-27120-15HP	PSC4-PDUNL-27120-15HP	○	○	50	40	40	99	120	27						
PSC5-PDUNR-27140-15HP	PSC5-PDUNL-27140-15HP	○	○	50	50	40	115.6	140	27						
PSC5-PDUNR-35100-15HP	PSC5-PDUNL-35100-15HP	○	○	63	50	50	79	100	35						
PSC5-PDUNR-35150-15HP	PSC5-PDUNL-35150-15HP	○	○	63	50	50	129	150	35						
PSC6-PDUNR-22110-15HP	PSC6-PDUNL-22110-15HP	○	○	40	63	32	78.5	110	22						
PSC6-PDUNR-27140-15HP	PSC6-PDUNL-27140-15HP	○	○	50	63	40	109.5	140	27						
PSC6-PDUNR-35175-15HP	PSC6-PDUNL-35175-15HP	○	○	63	63	50	146.7	175	35						

*刀片需单独订购 * Inserts should be ordered separately
*图例为右刀 * The picture shows the right tool

●标准库存 ○订单生产
● Standard stock ○ Production to order

杠杆压紧内孔车刀 Lever Clamping internal turning tool

-精准冷却设计
-冷却液设计压力≤150bar

Precise cooling design
Coolant design pressure ≤150bar

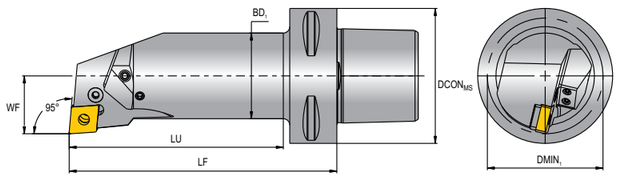

型号 Model 右刀 Right hand	左刀 Left hand	库存 Stock R	L	尺寸Size (mm) $DMIN_1$	$DCON_{MS}$	BD_1	LU	LF	WF	刀片 Insert	刀垫 Screw	杠杆 lever	挡垫 Shim pin	腰槽螺丝 Screw	扳手 Hex wrench
PSC3-PCLNR-22064-12HP	PSC3-PCLNL-22064-12HP	○	○	40	32	32	48	64	22	CN..1204..	PC12318	LV4	SP4	VHX0821	S3
PSC3-PCLNR-22096-12HP	PSC3-PCLNL-22096-12HP	○	○	40	32	32	80	96	22						
PSC4-PCLNR-22110-12HP	PSC4-PCLNL-22110-12HP	○	○	40	40	32	86.6	110	22						
PSC4-PCLNR-27080-12HP	PSC4-PCLNL-27080-12HP	○	○	50	40	40	59	80	27						
PSC4-PCLNR-27120-12HP	PSC4-PCLNL-27120-12HP	○	○	50	40	40	99	120	27						
PSC5-PCLNR-22110-12HP	PSC5-PCLNL-22110-12HP	○	○	40	50	32	82.2	110	22						
PSC5-PCLNR-27140-12HP	PSC5-PCLNL-27140-12HP	○	○	50	50	40	115.6	140	27						
PSC5-PCLNR-35100-12HP	PSC5-PCLNL-35100-12HP	○	○	63	50	50	79	100	35						
PSC6-PCLNR-22110-12HP	PSC6-PCLNL-22110-12HP	○	○	40	63	32	78.5	110	22						
PSC5-PCLNR-35150-16HP	PSC5-PCLNL-35150-16HP	○	○	63	50	50	129	150	35	CN..1606..	PC16476	LV5	SP5	VHX0825	S3
PSC6-PCLNR-27140-16HP	PSC6-PCLNL-27140-16HP	○	○	50	63	40	109.5	140	27						
PSC6-PCLNR-35175-16HP	PSC6-PCLNL-35175-16HP	○	○	63	63	50	146.7	175	35						

*刀片需单独订购 * Inserts should be ordered separately
*图例为右刀 * The picture shows the right tool

●标准库存 ○订单生产
● Standard stock ○ Production to order

杠杆压紧内孔车刀 Lever Clamping internal turning tool

-精准冷却设计
-冷却液设计压力≤150bar

Precise cooling design
Coolant design pressure ≤150bar

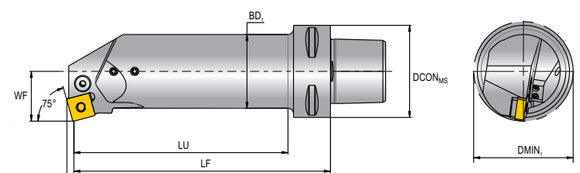

型号 Model 右刀 Right hand	左刀 Left hand	库存 Stock R	L	尺寸Size (mm) $DMIN_1$	$DCON_{MS}$	BD_1	LU	LPR	LF	WF	刀片 Insert	刀垫 Screw	杠杆 lever	挡垫 Shim pin	腰槽螺丝 Screw	扳手 Hex wrench
PSC4-PSKNR-22110-12HP	PSC4-PSKNL-22110-12HP	○	○	40	40	32	86.6	113.1	110	22	SN..1204..	PS12318	LV4	SP4	VHX0821	S3
PSC5-PSKNR-22110-12HP	PSC5-PSKNL-22110-12HP	○	○	40	50	32	82.2	113.1	110	22						
PSC5-PSKNR-27140-12HP	PSC5-PSKNL-27140-12HP	○	○	50	50	40	115.6	143.1	140	27						
PSC6-PSKNR-22110-12HP	PSC6-PSKNL-22110-12HP	○	○	40	63	32	78.5	113.1	110	22						
PSC6-PSKNR-35175-15HP	PSC6-PSKNL-35175-15HP	○	○	63	63	50	146.7	178.8	175	35	SN..1506..	PS15476	LV5	SP5	VHX0825	S3

*刀片需单独订购 * Inserts should be ordered separately
*图例为右刀 * The picture shows the right tool

●标准库存 ○订单生产
● Standard stock ○ Production to order

车刀杆 – 刚性锁紧系统 Turning tool bar - rigid locking system

C...-DCLN...-P mm

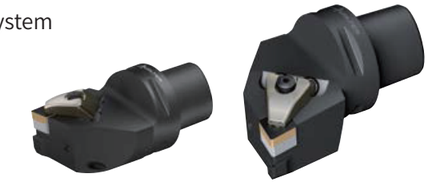

- 精密内冷 Precision internal cooling
- TM

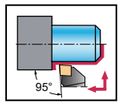

CN . .

刀具 tool

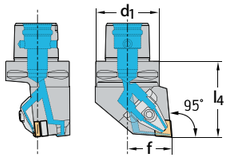

牌号 CODE		d_1	f mm	l_4 mm	D_{min} mm	D_{min2} mm	γ	λ_s	型号
C4-DCLNR-27050-12-P	12	C4	27	50	500	500	-6°	-6°	CN .. 1204 ..
C5-DCLNR-35060-12-P	12	C5	35	60	600	600	-6°	-6°	
C6-DCLNR-45065-12-P	12	C6	45	65	600	600	-6°	-6°	
C8-DCLNR-55080-12-P	12	C8	55	80	700	700	-6°	-6°	
C5-DCLNR-35060-16-P	16	C5	35	60	600	600	-5,5°	-6,4°	CN .. 1606 ..
C6-DCLNR-45065-16-P	16	C6	45	65	600	600	-6°	-6°	
C8-DCLNR-55080-16-P	16	C8	55	80	700	700	-5,5°	-6,4°	
C4-DCLNL-27050-12-P	12	C4	27	50	500	500	-6°	-6°	CN .. 1204 ..
C5-DCLNL-35060-12-P	12	C5	35	60	600	600	-6°	-6°	
C6-DCLNL-45065-12-P	12	C6	45	65	600	600	-6°	-6°	
C8-DCLNL-55080-12-P	12	C8	55	80	700	700	-6°	-6°	
C5-DCLNL-35060-16-P	16	C5	35	60	600	600	-5,5°	-6,4°	CN .. 1606 ..
C6-DCLNL-45065-16-P	16	C6	45	65	600	600	-6°	-6°	
C8-DCLNL-55080-16-P	16	C8	55	80	700	700	-5,5°	-6,4°	

尺寸草图所示为右手设计。The sketch shows a right-hand design.
建议的最大冷却液压力为 150 bar (2175 psi) Recommended maximum coolant pressure is 150 bar (2175 psi)
刀体和备件包括在供货范围内 Tool body and spare parts are included in the scope of supply

备件spare parts

型号 d_1	CN .. 1204 .. C4 – C8	CN .. 1606 .. C5 – C8
刀垫 shim	DC12476	DC16635
刀垫螺钉 shim scre 紧固力矩	L60 M4X8	L60 M5X12
压板 clamp	PK255	PK267
压板螺钉 clamp screw 紧固力矩	5412-M525	5412-M625
压簧 SPRING	Φ7	Φ8
旗形扳手 wrench	T15	S4，T20

附件Accessories

型号	CN .. 1204 ..	CN .. 1606 ..
(标准备件)(Standard spare parts) 压板组 clamp group	PK255-SET	PK267-SET

车刀杆 – 刚性锁紧系统 Turning tool bar - rigid locking system

C...-DDJN...-P mm

- 精密内冷 Precision internal cooling
- TM

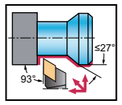

DN . .

刀具 tool

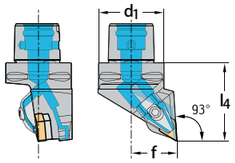

牌号 CODE		d_1	f mm	l_4 mm	D_{min} mm	D_{min2} mm	γ	λ_s	型号
C4-DDJNR-27055-11-P	11	C4	27	55	500	500	-6°	-7°	DN .. 1104 ..
C4-DDJNR-27055-15-P	15	C4	27	55	500	500	-6°	-7°	DN .. 1506 ..
C5-DDJNR-35060-15-P	15	C5	35	60	500	600	-6°	-7°	
C6-DDJNR-45065-15-P	15	C6	45	65	500	600	-6°	-7°	
C8-DDJNR-55080-15-P	15	C8	55	80	1.100	700	-6°	-7°	
C4-DDJNL-27055-11-P	11	C4	27	55	500	500	-6°	-7°	DN .. 1104 ..
C4-DDJNL-27055-15-P	15	C4	27	55	500	500	-6°	-7°	DN .. 1506 ..
C5-DDJNL-35060-15-P	15	C5	35	60	500	600	-6°	-7°	
C6-DDJNL-45065-15-P	15	C6	45	65	500	600	-6°	-7°	
C8-DDJNL-55080-15-P	15	C8	55	80	1.100	700	-6°	-7°	

尺寸草图所示为右手设计。 The sketch shows a right-hand design.
建议的最大冷却液压力为 150 bar (2175 psi) Recommended maximum coolant pressure is 150 bar (2175 psi)
刀体和备件包括在供货范围内 Tool body and spare parts are included in the scope of supply

备件spare parts

型号 d_1	DN .. 1104 .. C4	DN .. 1506 .. C4 – C8
刀垫 shim	MD11	DD15476
刀垫螺钉 shim screw 紧固力矩	DSP0510	L60 M4X8
压板 clamp	PK255	PK256
压板螺钉 clamp screw 紧固力矩	5412-M525	5415-M525
压簧 SPRING	Φ7	Φ7
旗形扳手 wrench	T15,S3	T15

附件Accessories

型号	DN .. 1104 ..	DN .. 1506 ..
(标准备件)(Standard spare parts) 压板组 clamp group	PK255-SET	PK256-SET
刀垫，用于 DN .. 1504.. Knife pad for DN 1504..		AP304-DN1504

车刀杆 - 刚性锁紧系统 Turning tool bar - rigid locking system

C...-DVJN...-P mm

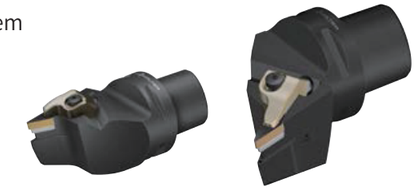

- 精密内冷 Precision internal cooling
- TM

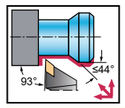

刀具 tool

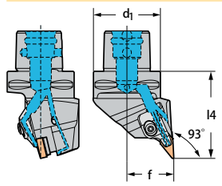

牌号 CODE		d_1	f mm	l_4 mm	D_{min} mm	D_{min2} mm	γ	λ_s	型号
C4-DVJNR-27062-16-P	16	C4	27	62	500	125	-4°	-13°	VN .. 1604 ..
C5-DVJNR-35065-16-P	16	C5	35	65	600	150	-4°	-13°	
C6-DVJNR-45065-16-P	16	C6	45	65	700	150	-4°	-13°	
C4-DVJNL-27062-16-P	16	C4	27	62	500	125	-4°	-13°	VN .. 1604 ..
C5-DVJNL-35065-16-P	16	C5	35	65	600	150	-4°	-13°	
C6-DVJNL-45065-16-P	16	C6	45	65	700	150	-4°	-13°	

尺寸草图所示为右手设计。The sketch shows a right-hand design.
建议的最大冷却液压力为 150 bar (2175 psi) Recommended maximum coolant pressure is 150 bar (2175 psi)
刀体和备件包括在供货范围内 Tool body and spare parts are included in the scope of supply

备件 spare parts

型号 d_1	VN .. 1604 .. C4 – C6
刀垫 shim	DV16320
刀垫螺钉 shim screw 紧固力矩	L60 M4X10B
左压板 clamp	PK261L
压板螺钉 clamp screw 紧固力矩	5412-M525
压簧 SPRING	Φ7
旗形扳手 wrench	T15

附件 Accessories

型号	VN .. 1604 ..
左侧压板组 clamp group	PK261L-SET

车刀杆 – 刚性锁紧系统 Turning tool bar - rigid locking system

C...-DWLN...-P mm

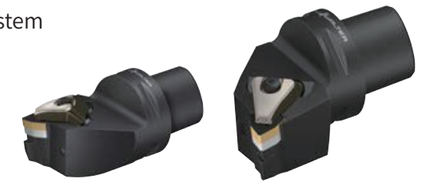

- 精密内冷 Precision internal cooling
- TM

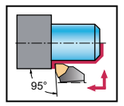

刀具 tool

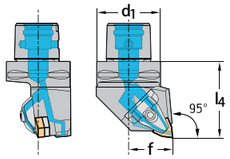

牌号 CODE		d_1	f mm	l_4 mm	D_{min} mm	D_{min2} mm	γ	λ_s	型号
C4-DWLNR-27050-08-P	8	C4	27	50	500	500	-6°	-6°	WN .. 0804 ..
C5-DWLNR-35060-08-P	8	C5	35	60	600	600	-6°	-6°	
C6-DWLNR-45065-08-P	8	C6	45	65	600	600	-6°	-6°	
C4-DWLNL-27050-08-P	8	C4	27	50	500	500	-6°	-6°	WN .. 0804 ..
C5-DWLNL-35060-08-P	8	C5	35	60	600	600	-6°	-6°	
C6-DWLNL-45065-08-P	8	C6	45	65	600	600	-6°	-6°	

尺寸草图所示为右手设计。The sketch shows a right-hand design.
建议的最大冷却液压力为 150 bar (2175 psi) Recommended maximum coolant pressure is 150 bar (2175 psi)
刀体和备件包括在供货范围内 Tool body and spare parts are included in the scope of supply

备件 spare parts

型号 d_1	WN .. 0804 .. C4 – C6
刀垫 shim	DW08476
刀垫螺钉 shim screw 紧固力矩	L60 M4X8
压板 clamp	PK255
压板螺钉 clamp screw 紧固力矩	5412-M525
压簧 SPRING	Φ7
旗形扳手 wrench	T15

附件 Accessories

型号	WN .. 0804 ..
(标准备件)(Standard spare parts) 压板组 clamp group	PK255-SET

车刀杆 – 刚性锁紧系统 Turning tool bar - rigid locking system

C...-DVJB...-P mm

- 精密内冷 Precision internal cooling
- TM

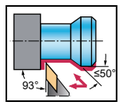

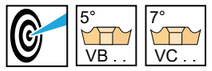

刀具 tool

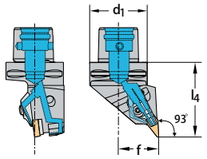

牌号 CODE		d_1	f mm	l_4 mm	D_{min} mm	D_{min2} mm	γ	λ_s	型号
C4-DVJBR-27062-16-P	16	C4	27	62	2.200	250	-2°	-7°	VB .. 1604 ..
C5-DVJBR-35065-16-P	16	C5	35	65	2.400	300	-2°	-7°	
C6-DVJBR-45065-16-P	16	C6	45	65	2.500	350	-2°	-7°	
C8-DVJBR-55080-16-P	16	C8	55	65	2.800	400	-2°	-7°	
C4-DVJBL-27062-16-P	16	C4	27	62	2.200	250	-2°	-7°	VB .. 1604 ..
C5-DVJBL-35065-16-P	16	C5	35	65	2.400	300	-2°	-7°	
C6-DVJBL-45065-16-P	16	C6	45	65	2.500	350	-2°	-7°	
C8-DVJBL-55080-16-P	16	C8	55	65	2.800	400	-2°	-7°	

尺寸草图所示为右手设计。The sketch shows a right-hand design.
建议的最大冷却液压力为 150 bar (2175 psi) Recommended maximum coolant pressure is 150 bar (2175 psi)
刀体和备件包括在供货范围内 Tool body and spare parts are included in the scope of supply

备件 spare parts

型号	VB .. 1604 .. C4 – C8
刀垫 shim	V16BS
刀垫螺钉 shim screw 紧固力矩	SM0508
左压板 clamp	PK261L
压板螺钉 clamp screw 紧固力矩	5412-M525
压簧 SPRING	Φ7
旗形扳手 wrench	T15

附件 Accessories

型号	VB .. 1604 ..
(标准备件) (Standard spare parts) 左侧压板组 clamp group	PK261L-SET

车刀杆 - 刚性锁紧系统 Turning tool bar - rigid locking system

C...-DDJC...-P mm

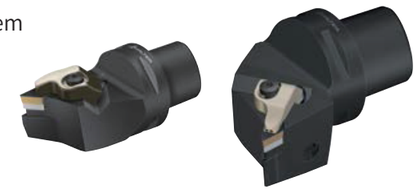

- 精密内冷 Precision internal cooling
- TM

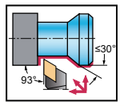

刀具 tool

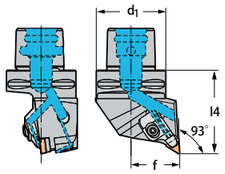

牌号 CODE		d_1	f mm	l_4 mm	D_{min} mm	D_{min2} mm	γ	λ	型号
C4-DDJCR-27050-11-P	11	C4	27	50	1.200	250	-3°	-7°	DC .. 11T3 ..
C5-DDJCR-35060-11-P	11	C5	35	60	1.400	300	-3°	-7°	
C4-DDJCL-27050-11-P	11	C4	27	50	1.200	250	-3°	-7°	DC .. 11T3 ..
C5-DDJCL-35060-11-P	11	C5	35	60	1.400	300	-3°	-7°	

尺寸草图所示为右手设计。The sketch shows a right-hand design.
建议的最大冷却液压力为 150 bar (2175 psi) Recommended maximum coolant pressure is 150 bar (2175 psi)
刀体和备件包括在供货范围内 Tool body and spare parts are included in the scope of supply

备件 spare parts

型号	DC .. 11T3 .. C4 – C5
刀垫 shim	D11BS
刀垫螺钉 shim screw	SM0508
左压板 clamp	PK261L
压板螺钉 clamp screw 紧固力矩	5412-M525
压簧 SPRING	Φ7
旗形扳手 wrench	T15

附件 Accessories

型号	DC .. 11T3 ..
(标准备件)(Standard spare parts) 左侧压板组 clamp group	PK261L-SET

QE外圆切断（槽）刀 QE external cutting (grooving) TOOL

-普通冷却设计
-冷却液设计压力≤10bar

-General cooling design
-coolant pressure ≤ 10bar

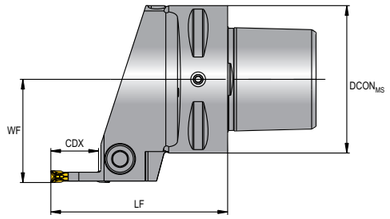

型号 Model 右刀 Right hand	型号 Model 左刀 Left hand	库存 Stock R	库存 Stock L	尺寸Size (mm) DCON$_{MS}$	LF	WF	CDX	刀片 Insert	螺钉 Screw	扳手 Hex wrench
PSC3-QE03R16-22055	PSC3-QEFDL16-22055	○	○	32	55	22	16	Z*FD*****-**	M5X20	S4
PSC4-QE03R16-27060	PSC4-QEFDL16-27060	○	○	40	60	27	16			
PSC5-QE03R16-35060	PSC5-QEFDL16-35060	○	○	50	60	35	16			
PSC6-QE03R16-45065	PSC6-QEFDL16-45065	○	○	63	65	45	16			
PSC3-QE04R16-22055	PSC3-QEGDL16-22055	○	○	32	55	22	16	Z*GD*****-**	M5X20	S4
PSC4-QE04R16-27060	PSC4-QEGDL16-27060	○	○	40	60	27	16			
PSC5-QE04R16-35060	PSC5-QEGDL16-35060	○	○	50	60	35	16			
PSC6-QE04R16-45065	PSC6-QEGDL16-45065	○	○	63	65	45	16			
PSC4-QE05R16-27065	PSC4-QEHDL16-27065	○	○	40	60	27	20	Z*HD*****-**	M6X20	S5
PSC5-QE05R16-35065	PSC5-QEHDL16-35065	○	○	50	60	35	20			
PSC6-QE05R16-45070	PSC6-QEHDL16-45070	○	○	63	65	45	20			
PSC8-QE05R16-42080	PSC8-QEHDL16-42080	○	○	80	80	45	20			

*刀片需单独订购 * Inserts should be ordered separately
*图例为右刀 * The picture shows the right tool

●标准库存 ○订单生产
● Standard stock ○ Production to order

QF端面切槽刀 QF end face grooving cutter

-普通冷却设计
-冷却液设计压力≤10bar

-General cooling design
-coolant pressure ≤ 10bar

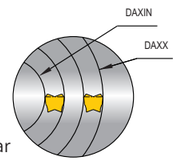

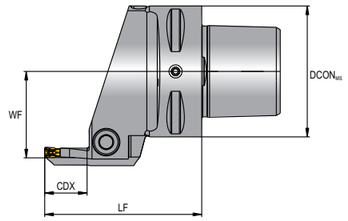

型号 Model 右刀 Right hand	型号 Model 左刀 Left hand	库存 Stock R	库存 Stock L	尺寸Size (mm) DCON$_{MS}$	LF	WF	DAXIN	DAXX	CDX	刀片 Insert	螺钉 Screw	扳手 Hex wrench
PSC4-QF03R16-27060H075100	PSC4-QF03L16-27060H075100	○	○	40	60	27	75	100	16	Z*FD	M5X20	S4
PSC5-QF03R16-35060H075100	PSC5-QF03L16-35060H075100	○	○	50	60	35	75	100	16			
PSC4-QF04R16-27060H048060	PSC4-QF04L16-27060H048060	○	○	40	60	27	48	60	16	Z*GD	M5X20	S4
PSC4-QF04R16-27060H060075	PSC4-QF04L16-27060H060075	○	○	40	60	27	60	75	16			
PSC4-QF04R16-27060H075100	PSC4-QF04L16-27060H075100	○	○	40	60	27	75	100	16			
PSC4-QF04R16-27060H100140	PSC4-QF04L16-27060H100140	○	○	40	60	27	100	140	16			
PSC4-QF04R16-27060H140240	PSC4-QF04L16-27060H140240	○	○	40	60	27	140	240	16			
PSC4-QF04R16-27060H240480	PSC4-QF04L16-27060H240480	○	○	40	60	27	240	480	16			
PSC5-QF04R16-33060H048060	PSC5-QF04L16-33060H048060	○	○	50	60	33	48	60	16			
PSC5-QF04R16-33060H060075	PSC5-QF04L16-33060H060075	○	○	50	60	33	60	75	16			
PSC5-QF04R16-33060H075100	PSC5-QF04L16-33060H075100	○	○	50	60	33	75	100	16			
PSC5-QF04R16-33060H100140	PSC5-QF04L16-33060H100140	○	○	50	60	33	100	140	16			
PSC5-QF04R16-33060H140240	PSC5-QF04L16-33060H140240	○	○	50	60	33	140	240	16			
PSC5-QF04R16-33060H240480	PSC5-QF04L16-33060H240480	○	○	50	65	39	240	480	16			
PSC6-QF04R16-39065H048065	PSC6-QF04L16-39065H048065	○	○	63	65	39	48	60	16			
PSC6-QF04R16-39065H065075	PSC6-QF04L16-39065H065075	○	○	63	65	39	60	75	16			
PSC6-QF04R16-39065H075100	PSC6-QF04L16-39065H075100	○	○	63	65	39	75	100	16			
PSC6-QF04R16-39065H100140	PSC6-QF04L16-39065H100140	○	○	63	65	39	100	140	16			
PSC6-QF04R16-39065H140240	PSC6-QF04L16-39065H140240	○	○	63	65	39	140	240	16			
PSC6-QF04R16-39065H240480	PSC6-QF04L16-39065H240480	○	○	63	65	39	240	480	16			
PSC4-QF05R16-27065H054070	PSC4-QF05L16-27065H054070	○	○	40	65	27	54	70	16	Z*HD	M6X20	S5
PSC4-QF05R16-27065H070095	PSC4-QF05L16-27065H070095	○	○	40	65	27	70	95	16			
PSC4-QF05R16-27065H095130	PSC4-QF05L16-27065H095130	○	○	40	65	27	95	130	16			
PSC4-QF05R16-27065H130180	PSC4-QF05L16-27065H130180	○	○	40	65	27	130	180	16			
PSC4-QF05R16-27065H140240	PSC4-QF05L16-27065H140240	○	○	40	65	27	140	240	16			
PSC4-QF05R16-27065H240000	PSC4-QF05L16-27065H240000	○	○	40	65	27	240	1000	16			
PSC5-QF05R16-33065H054070	PSC5-QF05L16-33065H054070	○	○	50	65	33	54	70	16			
PSC5-QF05R16-33065H070095	PSC5-QF05L16-33065H070095	○	○	50	65	33	70	95	16			
PSC5-QF05R16-33065H095130	PSC5-QF05L16-33065H095130	○	○	50	65	33	95	130	16			
PSC5-QF05R16-33065H130180	PSC5-QF05L16-33065H130180	○	○	50	65	33	130	180	16			
PSC5-QF05R16-33065H140240	PSC5-QF05L16-33065H140240	○	○	50	65	33	140	240	16			
PSC5-QF05R16-33065H240000	PSC5-QF05L16-33065H240000	○	○	50	65	33	240	1000	16			
PSC6-QF05R16-39070H054070	PSC6-QF05L16-39070H054070	○	○	63	70	39	54	70	16			
PSC6-QF05R16-39070H070095	PSC6-QF05L16-39070H070095	○	○	63	70	39	70	95	16			
PSC6-QF05R16-39070H095130	PSC6-QF05L16-39070H095130	○	○	63	70	39	95	130	16			
PSC6-QF05R16-39070H130180	PSC6-QF05L16-39070H130180	○	○	63	70	39	130	180	16			
PSC6-QF05R16-39070H140240	PSC6-QF05L16-39070H140240	○	○	63	70	39	140	240	16			
PSC6-QF05R16-39070H240000	PSC6-QF05L16-39070H240000	○	○	63	70	39	240	1000	16			

*刀片需单独订购 * Inserts should be ordered separately
*图例为右刀 * The picture shows the right tool

●标准库存 ○订单生产
● Standard stock ○ Production to order

PSC机床适配夹紧单元 PSC machine tool adaptive clamping unit

PSC接纳器为PSC刀具匹配不同的机床而设计。可以大大降低换刀时间和刀具库存，从而提升机床的使用率和降低刀具成本。

The PSC adaptor is designed for matching PSC tools with different machine tools. It can greatly reduce tool change time and tool inventory, thereby improving the utilization rate of machine tools and reducing tool costs.

根据不同机床的连接接口，我们还可以定制不同的刀座来满足你的使用，具体请与圣达刀具销售工程师联系！

According to the connection interfaces of different machine tools, we can also customize different tool holders to meet your needs. Please contact the sales engineer of SANT for details!

如何正确选择PSC刀具系统
How to Choose PSC Tool System Correctly

刀座选择示例
Example of holder selection

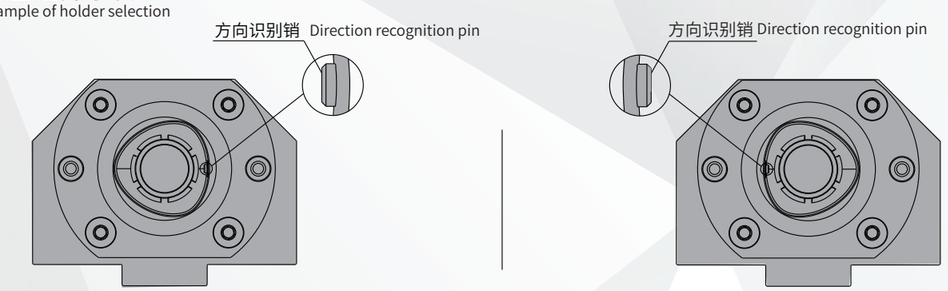

右刀座示例
Example of right holder

左刀座示例
Example of left hand holder

刀具选择示例

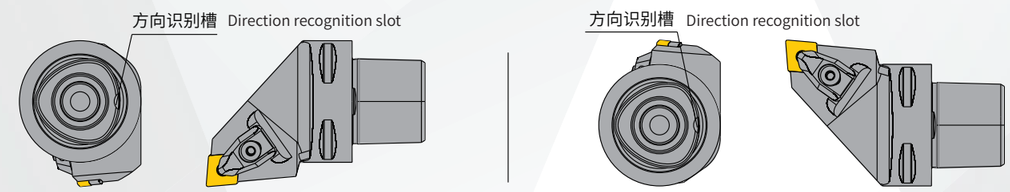

右手刀示例
Example of right-hand hand holder

左手刀示例
Example of Left holder

刀具匹配示例
Example of tool matching

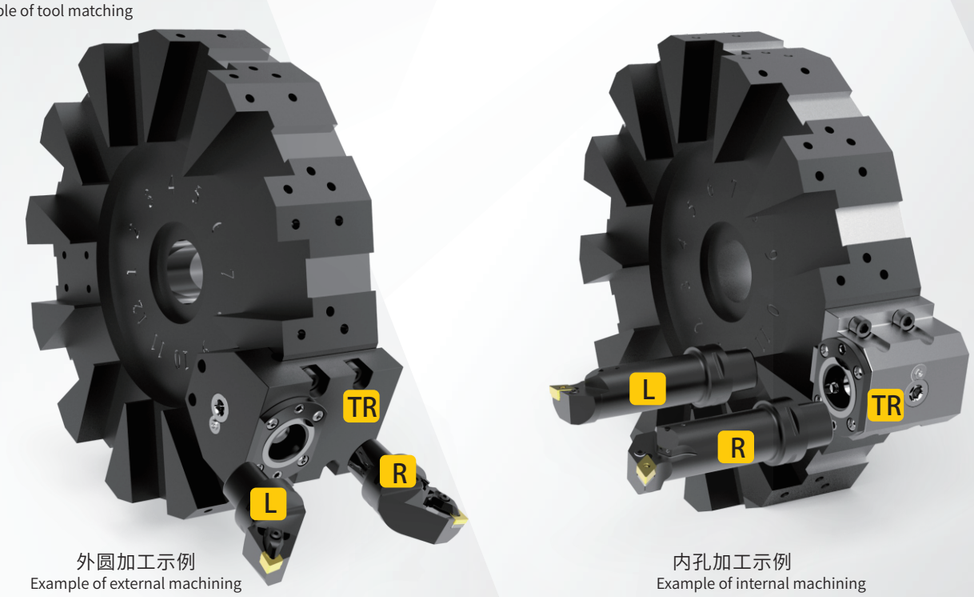

外圆加工示例
Example of external machining

内孔加工示例
Example of internal machining

TR 右刀座 Right holder

R 右手刀 Right hand tool

L 左手刀 Left-handed tool

垂直接柄 Vertical connection

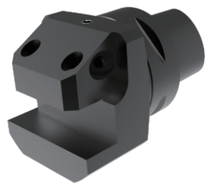

-普通冷却设计
-冷却液设计压力≤10bar

General cooling design
- Coolant pressure ≤10bar

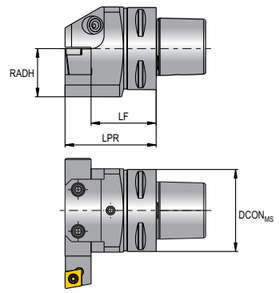

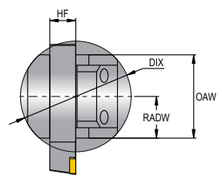

型号 Model	库存 Stock	尺寸Size (mm)										
		CZC$_{WS}$	DCON$_{MS}$	LPR	LF	WF	HF	OAW	OAH	RADH	RADW	DIX
PSC5-STHA-065-20	○	20x20	50	65	45	32	20	64	69	37	32	85
PSC6-STHA-070-20	○	20x20	63	70	50	32	20	64	69	37	32	85
PSC6-STHA-080-25	●	25x25	63	80	55	38	25	76	78	46	38	100
PSC8-STHA-075-25	●	25x25	80	75	50	38	25	80	86	46	38	103

● 标准库存 ○ 订单生产
● Standard stock ○ Production to order

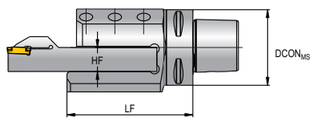

倾斜接柄 Inclined connection

-普通冷却设计
-冷却液设计压力≤10bar

General cooling design
- Coolant pressure ≤10bar

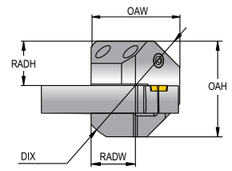

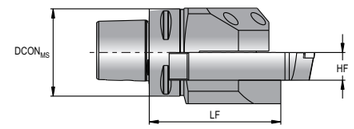

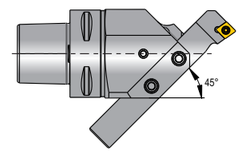

型号 Model 右刀 Right hand	型号 Model 左刀 Left hand	库存 Stock R	库存 Stock L	尺寸Size (mm) CZC$_{WS}$	DCON$_{MS}$	LF	HF	OAW	OAH	RADH	RADW	DIX
PSC5-STHR45-085-20	PSC5-STHL45-085-20	○	○	20x20	50	85	20	64	69	37	32	85
PSC6-STHR45-095-20	PSC6-STHL45-095-20	○	○	20x20	63	95	20	64	69	37	32	85
PSC6-STHR45-114-25	PSC6-STHL45-114-25	○	○	25x25	63	114	25	72	78	46	36	100

*图例为右刀 * The picture shows the right tool

● 标准库存 ○ 订单生产
● Standard stock ○ Production to order

水平接柄 Horizontal joint connection

-普通冷却设计
-冷却液设计压力≤10bar

General cooling design
- Coolant pressure ≤10bar

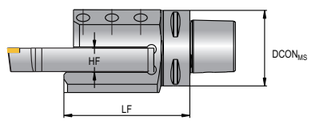

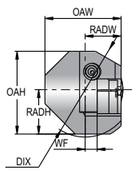

型号 Model 右刀 Right hand	型号 Model 左刀 Left hand	库存 Stock R	库存 Stock L	尺寸Size (mm) CZC$_{WS}$	DCON$_{MS}$	LF	WF	HF	OAW	OAH	RADH	RADW	DIX
PSC5-STHR-095-20	PSC5-STHL-095-20	○	○	20x20	50	95	10	20	55.5	69	37	30	85
PSC6-STHR-105-20	PSC6-STHL-105-20	○	○	20x20	63	105	10	20	63.5	69	37	30	85
PSC6-STHR-122-25	PSC6-STHL-122-25	○	○	25x25	63	122	13	25	70	78	46	38	100
PSC8-STHR-122-25	PSC8-STHL-122-25	○	○	25x25	80	122	15	25	80	86	46	40	103

*图例为右刀 * The picture shows the right tool

● 标准库存 ○ 订单生产
● Standard stock ○ Production to order

双工位接柄 Dual station connection

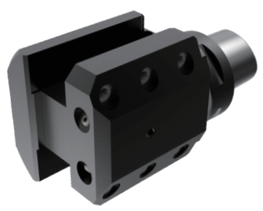

-普通冷却设计
-冷却液设计压力≤10bar

General cooling design
- Coolant pressure ≤10bar

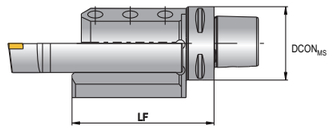

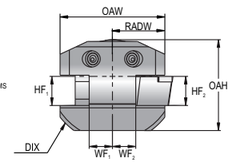

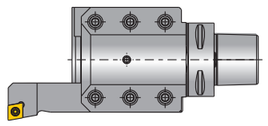

型号 Model	库存 Stock	尺寸Size (mm) CZC$_{WS}$	DCON$_{MS}$	LF	WF$_1$	WF$_2$	HF$_1$	HF$_2$	OAW	OAH	RADW	DIX
PSC6-STHS-122-25	●	25x25	63	122	20	20	25	25	90	78	45	114
PSC8-STHS-122-25	●	25x25	80	122	30	30	25	25	110	78	55	128

● 标准库存 ○ 订单生产
● Standard stock ○ Production to order

三工位接柄 Three station connection

-普通冷却设计
-冷却液设计压力≤10bar

General cooling design
- Coolant pressure ≤10bar

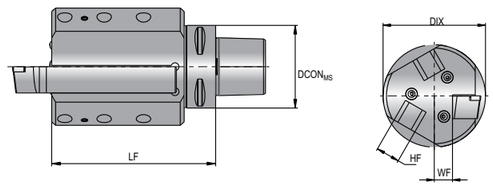

型号 Model 右刀 Right hand	型号 Model 左刀 Left hand	库存 Stock R	库存 Stock L	尺寸Size (mm) CZC$_{WS}$	DCON$_{MS}$	LF	WF	HF	DIX
PSC5-STHR3-36123-20	PSC5-STHL3-36123-20	○	○	20x20	50	123	16	20	90
PSC6-STHR3-36125-20	PSC6-STHL3-36125-20	○	○	20x20	63	125	16	20	90

*图例为右刀 * The picture shows the right tool

●标准库存 ○订单生产
● Standard stock ○ Production to order

VDI接纳器-涨爪式 VDI receiver - claw type

-高压冷却设计
-冷却液设计压力≤80bar

-High pressure cooling design
-coolant pressure≤ 80bar

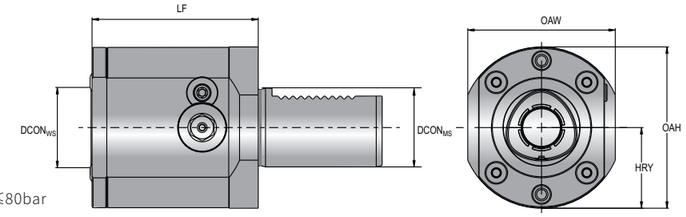

型号 Model 右刀 Right hand	型号 Model 左刀 Left hand	库存 Stock R	库存 Stock L	尺寸Size (mm) DCON$_{MS}$	DCON$_{WS}$	LF	OAW	OAH	HRY
PSC3-RC2030-00060M	PSC3-LC2030-00060M	○	○	30	32	60	50	61	34
PSC4-RC2040-00075M	PSC4-LC2040-00075M	○	○	40	40	75	75	75	41
PSC5-RC2040-00085M	PSC5-LC2040-00085M	○	○	40	50	85	75	82	41
PSC4-RC2050-00065M	PSC4-LC2050-00065M	○	○	50	40	65	70	83	49
PSC5-RC2050-00085M	PSC5-LC2050-00085M	○	○	50	50	85	83	90	49
PSC5-RC2060-00075M	PSC5-LC2060-00075M	○	○	60	50	75	80	100	58
PSC6-RC2060-00095	PSC6-LC2060-00095	○	○	60	63	95	84	111	58

*图例为右刀 * The picture shows the right tool

●标准库存 ○订单生产
● Standard stock ○ Production to order

圆刀杆接柄 Round tool shank

-普通冷却设计
-冷却液设计压力≤10bar

General cooling design
- Coolant pressure ≤10bar

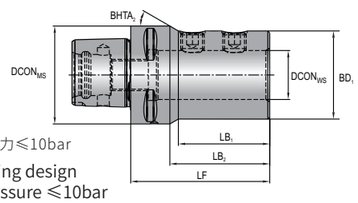

1

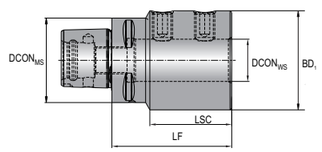

2

型号 Model	库存 Stock	尺寸Size (mm) DCON$_{MS}$	DCON$_{WS}$	LSC	LF	LB$_1$	LB$_2$	BD$_1$	BHTA$_2$	DSGN
PSC3-STHI-20 060	○	32	20	51	60	60	-	40	-	2
PSC3-STHI-25 080	○	32	25	57	80	80	-	45	-	2
PSC4-STHI-20 060	●	40	20	51	60	60	-	40	-	2
PSC4-STHI-25 077	●	40	25	57	77	77	-	45	-	2
PSC4-STHI-32 088	●	40	32	61	88	88	-	52	-	2
PSC5-STHI-20 060	●	50	20	51	60	37.7	40	40	65°	1
PSC5-STHI-25 071	●	50	25	57	71	46.7	51	45	30°	1
PSC5-STHI-32 075	●	50	32	61	75	75	-	52	-	2
PSC5-STHI-40 100	○	50	40	71	100	100	-	65	-	2
PSC6-STHI-20 070	●	63	20	51	70	43.8	48	40	70°	1
PSC6-STHI-25 070	●	63	25	57	72	45.8	50	45	65°	1
PSC6-STHI-32 075	●	63	32	61	75	49.8	53	52	60°	1
PSC6-STHI-40 085	○	63	40	71	85	85	-	65	-	2

●标准库存 ○订单生产
● Standard stock ○ Production to order

VDI接纳器-涨爪式 VDI receiver - claw type

-高压冷却设计
-冷却液设计压力≤80bar

-High pressure cooling design
-coolant pressure≤ 80bar

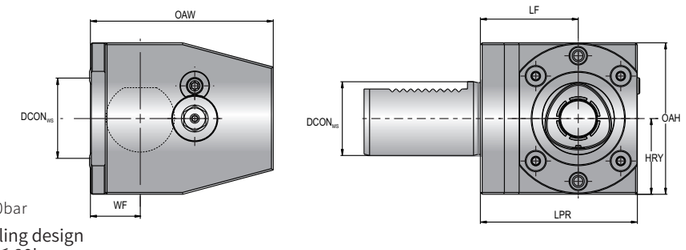

型号 Model 右刀 Right hand	型号 Model 左刀 Left hand	库存 Stock R	库存 Stock L	尺寸Size (mm) DCON$_{MS}$	DCON$_{WS}$	LPR	LF	WF	OAW	HRY	OAH
PSC3-RC2030-41020M	PSC3-LC2030-41020M	○	○	30	32	60	41	20	74	30	57
PSC3-RC2030-41030M	PSC3-LC2030-41030M	○	○	30	32	60	41	30	74	30	57
PSC4-RC2040-51030M	PSC4-LC2040-51030M	○	○	40	40	75	51	30	86	38	75
PSC4-RC2040-51040M	PSC4-LC2040-51040M	○	○	40	40	75	51	40	86	38	75
PSC5-RC2040-53030M	PSC5-LC2040-53030M	○	○	40	50	85	53	30	99	41	82
PSC5-RC2040-53040M	PSC5-LC2040-53040M	○	○	40	50	85	53	40	99	41	82
PSC5-RC2050-53030M	PSC5-LC2050-53030M	○	○	50	50	85	53	30	99	43	86
PSC5-RC2050-53040M	PSC5-LC2050-53040M	○	○	50	50	85	53	40	99	43	86
PSC5-RC2060-43040M	PSC5-LC2060-43040M	○	○	60	50	75	43	40	99	53	94
PSC6-RC2060-53040	PSC6-LC2060-53040	○	○	60	63	95	53	40	122	53	105

*图例为右刀 * The picture shows the right tool

●标准库存 ○订单生产
● Standard stock ○ Production to order

VDI接纳器-拉钉式 VDI Receiver - Pull Pin Type

-高压冷却设计
-冷却液设计压力≤80bar

-Ordinary cooling design
-coolant pressure≤ 80bar

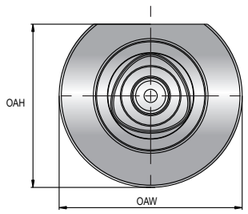

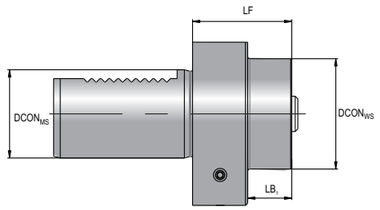

型号 Model	库存 Stock	尺寸Size (mm)					
		DCON$_{MS}$	DCON$_{WS}$	LB$_1$	LF	OAW	OAH
PSC3-NC3000-V30-035	○	30	32	15	35	68	62
PSC4-NC3000-V30-060	○	30	40	40	60	68	62
PSC3-NC3000-V40-030	○	40	32	10	30	83	74
PSC4-NC3000-V40-030	○	40	40	5	30	83	74
PSC5-NC3000-V40-045	○	40	50	20	45	83	74
PSC6-NC3000-V40-090	○	40	63	70	90	83	74
PSC3-NC3000-V50-035	○	50	32	10	35	98	84
PSC4-NC3000-V50-040	○	50	40	15	40	98	84
PSC5-NC3000-V50-050	○	50	50	25	50	98	84
PSC6-NC3000-V50-070	○	50	63	45	70	98	84
PSC8-NC3000-V50-100	○	50	80	75	100	98	90
PSC5-NC3000-V60-050	○	60	50	20	50	123	104
PSC6-NC3000-V60-050	○	60	63	20	50	123	104
PSC8-NC3000-V60-085	○	60	80	55	85	123	104

●标准库存 ○订单生产
● Standard stock ○ Production to order

方柄接纳器-涨爪式 Square handle receiver - expansion claw type

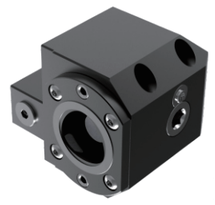

-普通冷却设计
-冷却液设计压力≤80bar

-Ordinary cooling design
-coolant pressure≤ 80bar

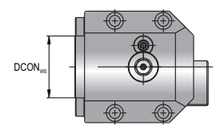

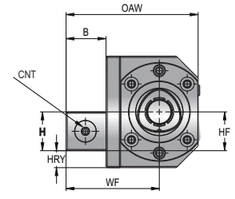

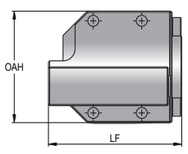

型号 Model 右刀 Right hand	型号 Model 左刀 Left hand	库存 Stock R	库存 Stock L	尺寸Size (mm) DCON$_{WS}$	B	H	LF	WF	HF	OAW	OAH	HRY	CNT
PSC4-RC2080-59110A	PSC4-LC2080-59110A	○	○	40	26	25	110	59	25	83	77	13	G 1/4-19
PSC5-RC2080-77110A	PSC5-LC2080-77110A	○	○	50	33	32	110	77	32	109	92	14	G 1/4-19
PSC6-RC2080-93140	PSC6-LC2080-93140	○	○	63	40	40	140	93	40	135	105	13	G 1/4-19

*图例为右刀 * The picture shows the right tool

●标准库存 ○订单生产
● Standard stock ○ Production to order

方柄接纳器-涨爪式 Square handle receiver - expansion claw type

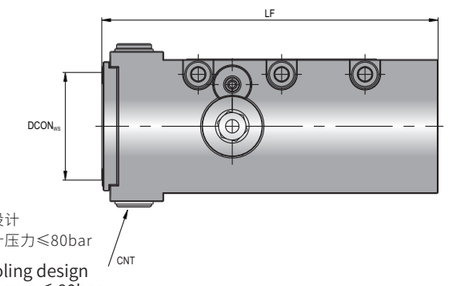

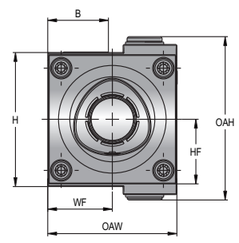

-高压冷却设计
-冷却液设计压力≤80bar

-Ordinary cooling design
-coolant pressure≤ 80bar

型号 Model 右刀 Right hand	型号 Model 左刀 Left hand	库存 Stock R	库存 Stock L	尺寸Size (mm) DCON$_{WS}$	B	H	LF	WF	HF	OAW	OAH	CNT
PSC3-RC2085-4038M	PSC3-LC2085-4038M	○	●	32	20	40	95	19	20	38	62	G 1/8-28
PSC4-RC2085-5048	PSC4-LC2085-5048	○	●	40	25	50	125	24	25	48	58	G 1/8-28
PSC5-RC2085-6464	PSC5-LC2085-6464	○	●	50	32	64	146	32	32	64	72	G 1/8-28

*图例为右刀 * The picture shows the right tool

●标准库存 ○订单生产
● Standard stock ○ Production to order

液压法兰接纳器-涨爪式 Hydraulic flange receiver - claw type

-高压冷却设计
-冷却液设计压力≤150bar

-High pressure cooling design
-Design pressure of coolant ≤ 150bar

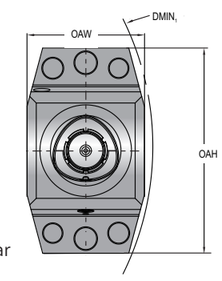

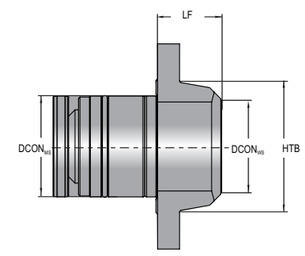

型号 Model	库存 Stock	尺寸Size (mm) DCON$_{WS}$	DCON$_{MS}$	LF	HTB	OAW	OAH	DMIN$_1$
PSC5-NC5030-00035	○	50	55	35	70	64	112	300
PSC6-NC5030-00040	○	63	70	40	90	84	143	400
PSC8-NC5030-00050	○	80	90	50	110	100	180	500

●标准库存 ○订单生产
● Standard stock ○ Production to order

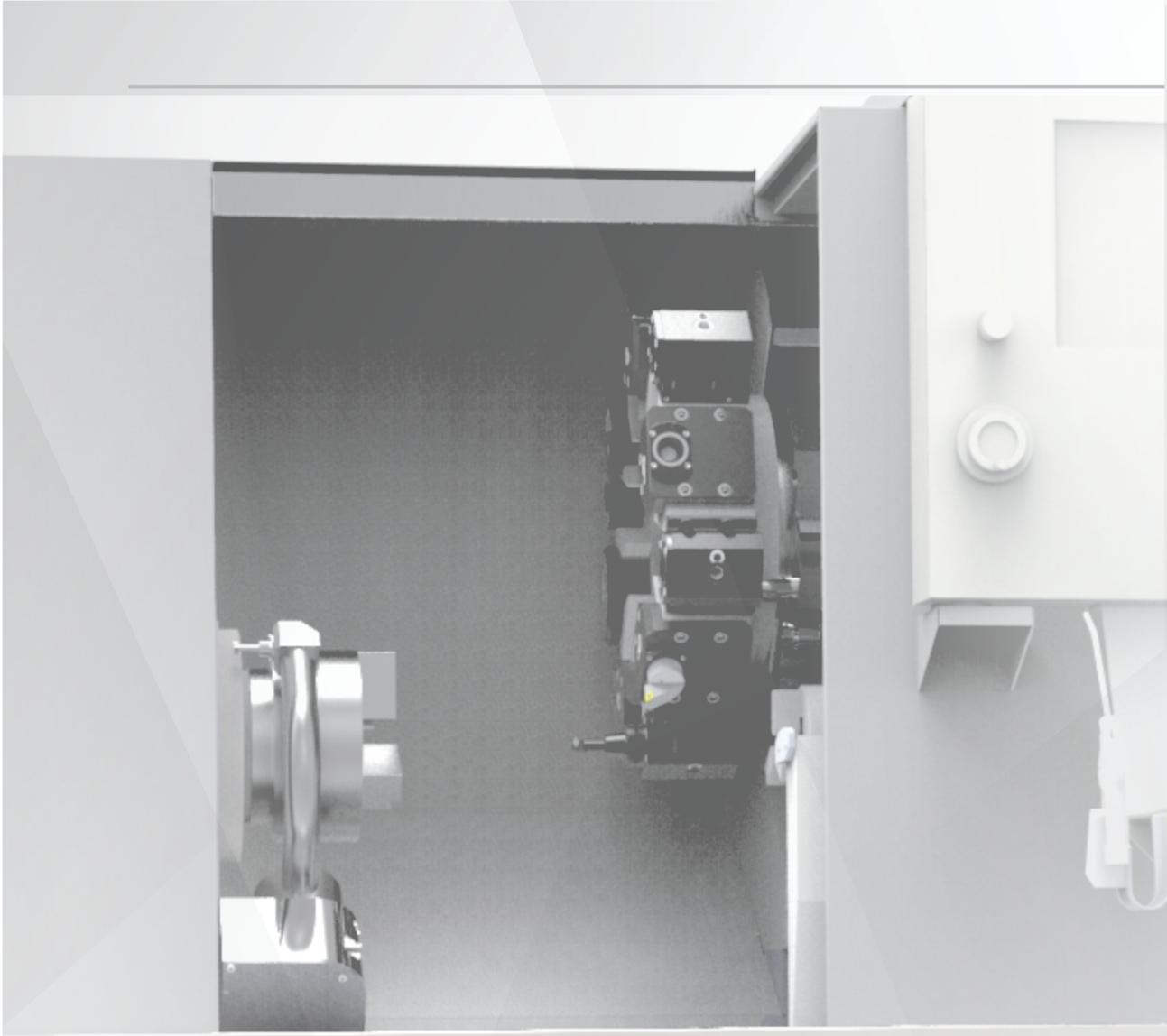

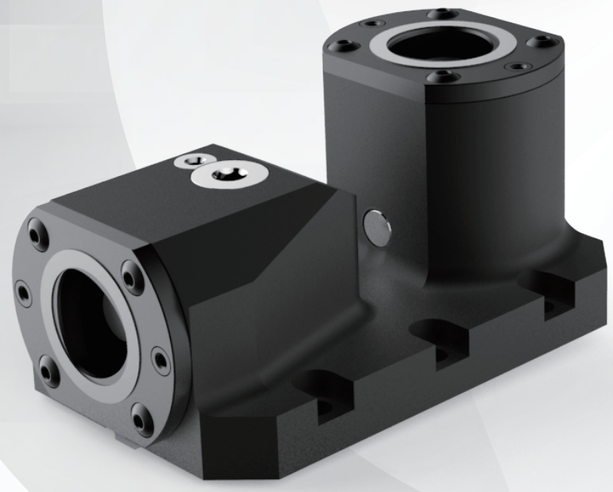

Due to the different interfaces and diverse applications of machine tools, in order to meet your machining needs, we provide customized services for PSC tool holders with various interfaces and various forms of PSC tools. If you have customized needs for PSC tool holders and PSC tools, please contact the sales engineer of SANT Tools

由于机床接口的不同及应用的多样性，为满足您的加工需求，
我们提供各类接口的PSC刀座以及形式各异的PSC刀具的定制服务，
如果，您有PSC刀座及PSC刀具的定制需求，请联系圣达刀具 销售工程师....